▶ **By use in explosive hazardous areas read and follow the**

special conditions and instructions for safe application

of the attached

explosive protection information

B3 / B1 / B5

first and take notice of the operating instructions.

Operating instructions

1. Description

1.1 Intended use

The level indicator observes the filling level as a limit switch in silos and vessels. It can be used as full, demand and empty indicator for dusty and powdery, granulated and grainy bulk goods with a max. grain size up to 30 mm and with a bulk density of 0.3 t/m³ ... 2.5 t/m³.

1.2 Function

The bulk goods presses with its weight against the membrane. A tappet directly transfers the pressure from the membrane to the switch. When the bulk goods are decreasing, pressure is taken off the membrane and the switch will be interconnected.

1.3 Technical data

Manufacturer		**MOLLET Füllstandtechnik GmbH**
Address		Industriepark RIO 103 74706 Osterburken
Name		Membrane level indicator
Type		**MFE** (GFK) and **MFE-A** (Alu) **MFEF** (GFK) and **MFEF-A** (Alu)
Temperature range	*Ta*	GFK **-20 °C ... +60 °C** | Aluminium **-25 °C ... +80 °C**
Signal contact		change-over contact, potentialfree
max. Switching voltage	*Contact*	see Type plate
max. Braking capacity	*Contact*	see Type plate
Response delay		none
Cable connection		Screw M4
Cable entry		Cable gland M20x1.5
Type of protection acc. to DIN EN 60529	*IP*	**IP40** **IP53** if cable gland is upwards **IP65** with stainless steel membrane **IP66** with aluminium housing
Overpressure safety		up to 1 bar
Weight		**MFE** 0.48 kg **MFE-A** 0.95 kg **MFEF** 0.49 kg **MFEF-A** 1.00 kg
Maintenance		none
Mounting position		any position

1.4 Materials

Type		Housing
MFE(F)- . .	=	GFK (glass-fibre reinforced plastics)
MFE(F)-A . .	=	Aluminium

Type		Membrane	Mounting ring
MFE(F)- . NN	=	NBR	Steel, galvanized
MFE(F)- . VN	=	VITON	Steel, galvanized
MFE(F)- . NE	=	NBR	Stainless steel 1.4301 / 304
MFE(F)- . VE	=	VITON	Stainless steel 1.4301 / 304
MFE(F)- . EE	=	304	Stainless steel 1.4301 / 304

1.5 Dimensions

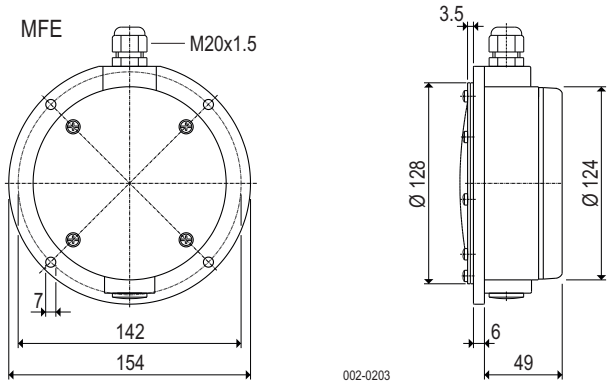

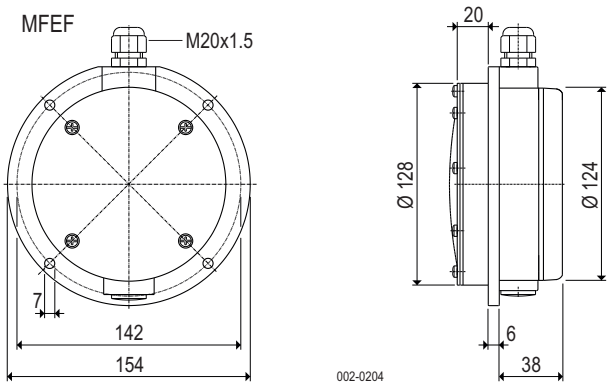

2. Installation

2.1 Preparation

- Check the membrane of visual transport damage.
- Read and follow the safety instructions and the operating instructions, before handling with the device !

2.2 Mounting in the vessel

Position the level indicator with the gasket at the provided flange and fix it with 4 washers and screws M6.

2.3 Electrical connection

Circuit diagram

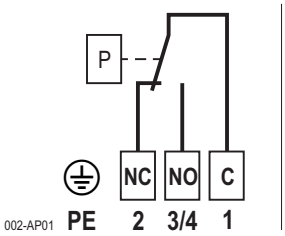

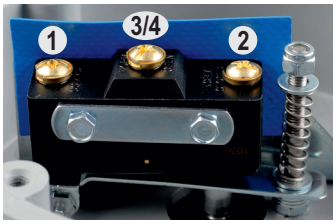

2.4 Cable gland

- After electrical connection, tighten the cable gland.
- Screw the cap nut, until the cable entry is closed tightly.

3. Commissioning

- Put the level indicator into operation only, if the installation and the electrical connection have been done correctly.
- The level indicator is presetted at sensitive.
- With the adjusting nut the device can be adjustable insensitive. Clockwise insensitive.
- **Sensitivities** with membrane:

NBR	60 g ... 1000 g
VITON	60 g ... 1000 g
Stainless steel 1.4301 / 304	150 g ... 2000 g

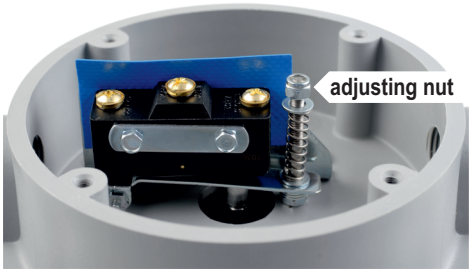

4. Utilization

4.1 Normal operation

- Use the level indicator in its intended application only.
- The level indicator is provided for use in silos or vessels with pressureless operation.
- Comply with the specifications on the data plate. Check the membrane of the level indicator, when the permissible temperature of bulk goods was exceeded or was fallen short off.
- Damaged devices have to put out of operation immediately.

4.2 Inexpert handling

- Ignoring of the safety instructions and the operating instructions.
- Not intended use.
- Mounting of spare parts which are no original parts.
- Violation against applicable law and standards.

5. Maintenance and servicing

5.1 General informations

- Do maintenance work only, if the silo or the vessel is empty and if there is no overpressure or vacuum.
- Use original spare parts only.

5.2 Maintenance

- Inspect in regular intervals if there is any wear or abrasion at the membrane. Define the control intervals, depending on the characteristics of the bulk goods.
- In case of damage or abrasion, replace the membrane immediately with a new membrane.

5.3 Servicing

- Damaged parts have immediately replaced with similar.
- Until the complete reconstruction of the proper function, the level indicator must not be used any more.

6. Storage

- Store the level indicator dry and dust-free.
- Protect the membrane against pointed objects and ultraviolet radiation.

7. Disposal

- The level indicator can be recycled.
- The disposal applies to the valid environmental guidelines according to the location of the carrier and the local manufacturing conditions.

Membrane level indicator
MFE-A with aluminium housing

MFE-A

Gas+ Dust

Explosion protection information
and supplement to the operating instructions

Type plate details B5
Gas+Dust and **hybrid mixtures**

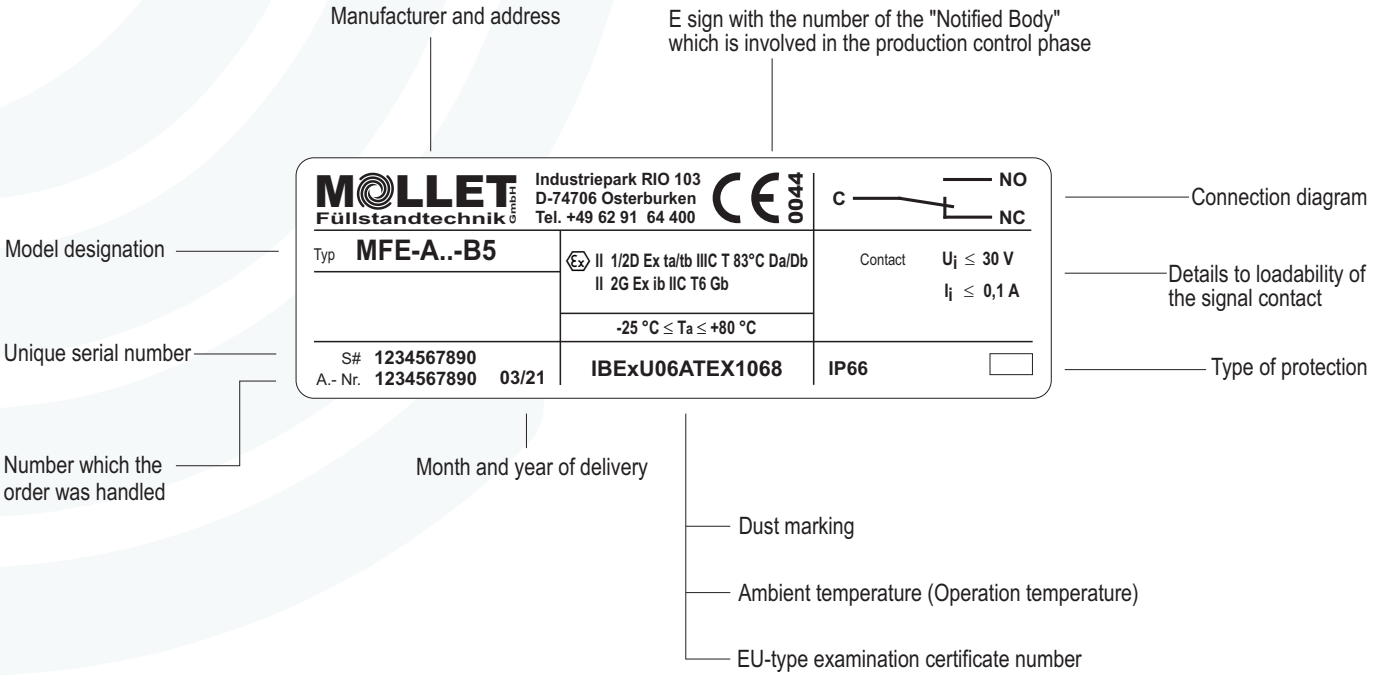

MOLLET
Competence in explosion protection

MFE-A membrane level indicator with aluminium housing

Marking in accordance with ATEX and DIN EN IEC 60079-0

Membrane level indicator for use on the boundary from zone 20 to zone 21.

Ex II 1/2 D Ex ta/tb IIIC T83°C Da/Db

Equivalent to **valid ATEX-Product-Directive**

Equipment group **II** = everything except mining

Equipment category Category **1** for zone 20, 21 and 22
Category **2** for zone 21 and 22

/ = Level indicators, which are installed on the boundary between different zones

D = Dust - Type of explosive atmosphere

the **Ex** - symbol according to DIN EN IEC 60079-0

t = Protection by enclosure

a = Device with „very high“ protection standard. . . .for zone 20, 21 and 22

b = Device with „high“ protection standard. . . . . .for zone 21 and 22

IIIC for flammable conductive dust, flammable non-conductive dust and flammable fibres and flyings

T..°C maximum surface temperature

Equipment Protection Level (EPL)

D = Dust - Type of explosive atmosphere

a = Device with “very high level of protection” for use in potentially explosive atmospheres where in normal operation, foreseeable or infrequent faults/malfunctions no ignition hazard is given.

b = Device with “high level of protection” for use in potentially explosive atmospheres where in normal operation or foreseeable faults/malfunctions no ignition hazard is given.

Membrane level indicator for use in zone 1.

Ex II 2G Ex ib IIC T6 Gb

Equipment category Category **2** for zone 1 and 2

G = Gas - Type of explosive atmosphere

i = Protection by intrisically safe

b = Device with „high“ protection standard. . . . . .for zone 1 and 2

IIC for all flammable gases

Temperature class **T6** = 85°C

Equipment Protection Level (EPL)

G = Gas - Type of explosive atmosphere

b = Device with “high level of protection” for use in potentially explosive atmospheres where in normal operation or foreseeable faults/malfunctions no ignition hazard is given.

MFE-A membrane level indicator with aluminium housing

Order code **B5**

Marking: II 1D / 2D
II 2G

Gas+Dust Ex and **hybrid mixtures**

Equipment category appropriation by zones

Membran level indicator for use on the boundary from zone 20 to zone 21 and in zone 1.

Ambient temperatures Ta

The ambient temperature **Ta** defines the maximum operating temperature of the indicators. Inside the vessel this is process temperature (the air or the bulk goods temperature) nearby the device.

maximum surface temperature T

The maximum surface temperature means the hottest point at the equipment.
The device matches with temperature class **T 6.**

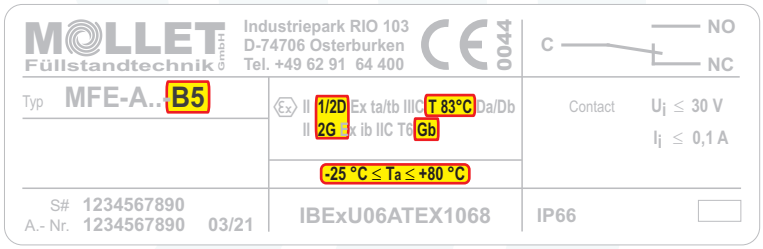

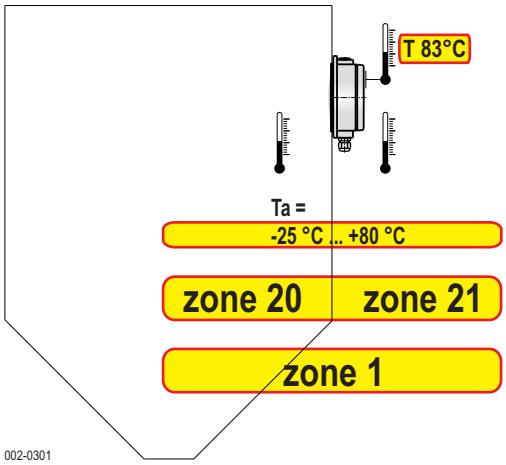

MFE-A membrane level indicator with aluminium housing

Special conditions and instructions for safe application

1. The installation, maintenance, initial operation, removal and repair have to be controlled resp. checked by an “authorized person” for explosion protection.

2. For the electrical connection you have to take notice of the local and statutory requirements and/or the VDE 0100.

3. Take notice of the specifications on the data plate.

4. Using the device in ambient temperatures > +60 °C, the applied connection cables have to be made for temperatures of min. +80 °C.

5. As soon as the device will be brought into the explosion hazardous area it has to be mounted immediately at the precaused place and a cable has to be brought into the cable gland.

6. The cable gland were screwed and protected at the factory. Please check if the cable gland have loosened during on the mounting or at the transport. When it is loosened, it has to be fitted again.

7. To secure the type of protection, the screw nut of the cable gland has to be fixed at the installation with a torsional force of min. 5 Nm.
   ATTENTION! If it will be fastened too strong, the IP-protection can be affected.

8. The earth connection of the device has to be installed in such a way that mechanical damage will be excluded.

9. The device may put into operation with built-in cap-sealing and when it is closed, only.

10. Switch off the power supply, before opening the device. (touchdangerous voltage)

11. Depending on the bulk goods characteristics and the wear, the carrier has to define resp. to find out in which intervals the membrane of the level indicator has to be checked for leakage to keep the type of protection (Dust-proof). This inspection has to be repeated regularly. If there is a fault, the membrane has to be replaced with a new membrane.

12. Take notice of the requirements of DIN EN 60079-14, DIN EN 60079-17 and DIN EN 1127-1, especially regarding the dust deposits and temperatures and follow the pertinent rules and regulations.

13. **ATTENTION!**
    For load limitation a certified barrier or a certified isolation amplifier with an intrinsically safe circuit at least for the category “ib” has to be connected in series, witch is certified for gases of explosion group IIC.

14. Take notice of the requirements of DIN EN 60079-14, DIN EN 60079-17 and DIN EN 1127-1, especially regarding the dust deposits and temperatures and follow the pertinent rules and regulations.

15. The device with an intrinsically safe electric circuit can be used in dusty explosive hazardous areas.

16. **Hybrid Mixtures**
    The level indicator is approved for the use in hybrid mixtures.

Single parts

MFE MFEF

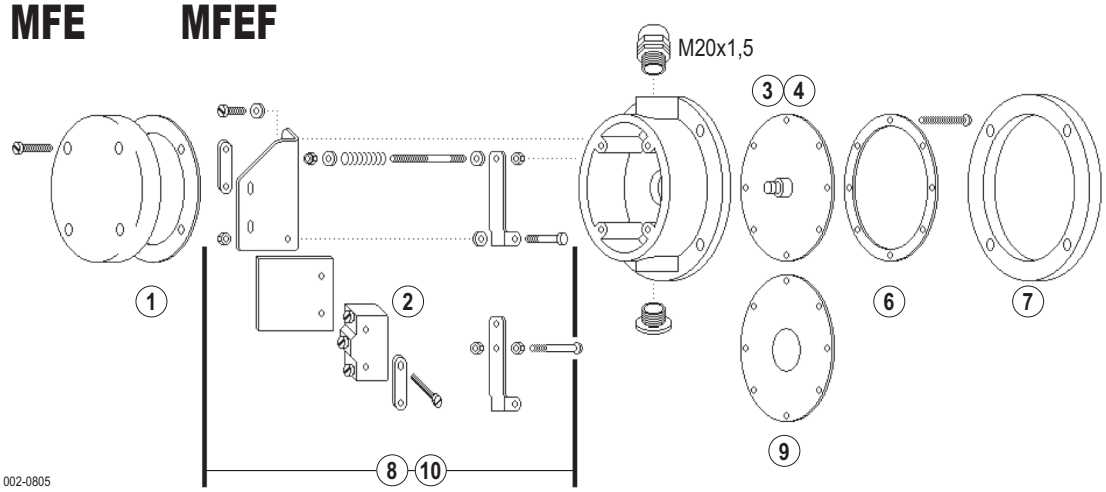

Item	Reference	Order code	Material
1	Cap seal	MF-DS001	NBR
2	Switch	BZ-2R-A2	
3	Tappet	MF-WE001	Aluminium
4	Membrane **N .**	MF-MB-NR	Bulk solids touching membrane made of NBR
6	Mounting ring **. N** Mounting ring **. E**	MF-HR-ST MF-HR-VA	Steel, galvanized Stainless steel 304
7	Gasket	MF-FD-NR	NBR foam
8	Spare part kit incl. switch	MF-EP001	Design for bulk solids touching membrane made of NBR
9	Membrane **V .**	MF-MB-VI	Bulk solids touching membrane made of VITON
10	Spare part kit incl. switch	MF-EP002	Design for bulk solids touching membrane made of VITON

MFE-EE-B3 MFEF-EE-B3 MFE-AEE MFEF-AEE

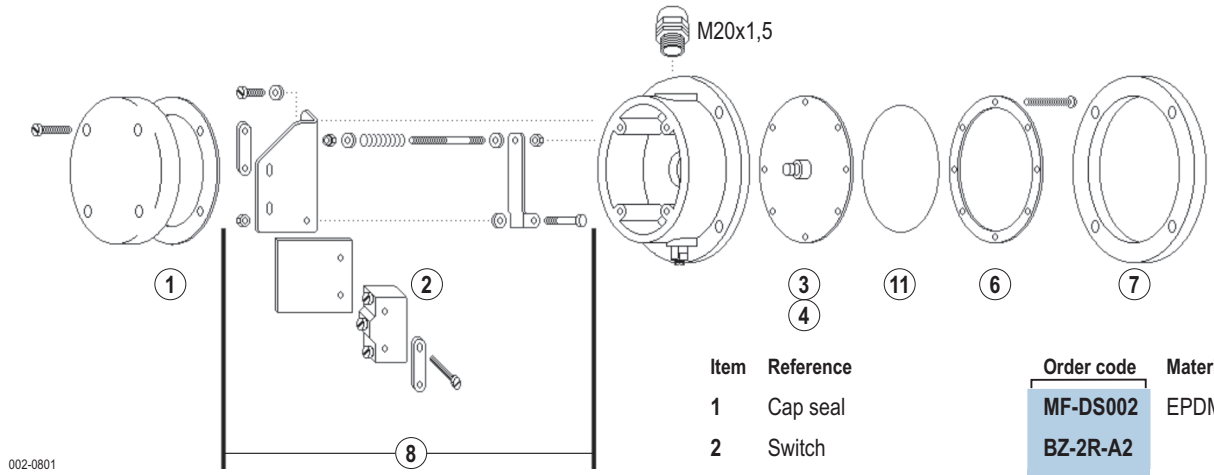

Item	Reference	Order code	Material
1	Cap seal	MF-DS002	EPDM
2	Switch	BZ-2R-A2	
3	Tappet	MF-WE001	Aluminium
4	Sealing	MF-MB-NR	NBR
6	Mounting ring **. E**	MF-HR-VA	Stainless steel 304
7	Gasket	MF-FD-NR	NBR foam
8	Spare part kit incl. switch	MF-EP001	
11	Membrane **E .**	MF-MB-VA	Stainless steel 304

EU-Konformitätserklärung
EU-Declaration of Conformity

Wir/We

MOLLET Füllstandtechnik GmbH

Industriepark RIO 103
D-74706 Osterburken
Tel. 06291 64400 Fax 06291 9846

erklären in alleiniger Verantwortung, dass das Produkt:
declares under our sole responsibility, that the product:

Membran-Füllstand-Grenzschalter / Membrane limit switch
Membran-Füllstandanzeiger / Membrane level indicator

Typ/Type **MFE ...**

den folgenden Europäischen Richtlinien entspricht:
conforms with the following European directives:

Niederspannungsrichtlinie **Low voltage directive** **2014/35/EU**

Angewandte harmonisierte Normen oder normative Dokumente:
Applied harmonized standards or normative documents:

DIN EN 61010-1:2020 **DIN EN 60529:2014**

Und die Geräte mit Ex - Kennzeichnung entsprechen zusätzlich der folgenden Europäischen Richtlinie:
And the devices with Ex - marking conform additional with the following European directive:

ATEX-Richtlinie **ATEX directive** **2014/34/EU**

Je nach Ausführungsvariante angewandte harmonisierte Normen oder normative Dokumente:
Depending on the design applied harmonized standards or normative documents:

DIN EN IEC 60079-0:2019 **DIN EN 60079-11:2012** **DIN EN 60079-31:2014**

EG-Baumusterprüfbescheinigungsnummer:
EU-Type Examination Certificate: **IBExU06ATEX1068**

Ausgestellt von:.
Issued by: IBExU Institut für Sicherheitstechnik GmbH, 09599 Freiberg (0637)

Qualitätssicherung:
Quality assurance: TÜV NORD CERT GmbH, 30159 Hannover (0044)

Osterburken, den 03.03.2020

MOLLET - Füllstandtechnik GmbH D-74706 Osterburken - ExBH

Wolfgang Hageleit
Geschäftsführer / managing director

Diese Erklärung darf nur unverändert weiterverbreitet werden.
This declaration is only allowed to hand out in unchanged form.