Rotary blade level indicators
Level limit switches for bulk goods

DF

Appliance information

Index | Page

MOLLET in rotation for you

Application (Regular use)

The electromechanical level limit switch Type **DF,** is to be used as

full, empty and demand indicator.

For monitoring the filling level in:

Silos, bunkers,
containers, hoppers,
weighers,vessels,
discharge pipes etc.

For all bulk goods up to grain size:

approx. 150 mm

With bulk density:

0.01 t/m³ to over 2.0 t/m³.

Bulk goods such as, for example:

Dust, powder, grains, balls,
granulates, pellets, plates, foams,
chips, fibres, flux threads, feathers,
germs, roots, tubers, leaves,
sand, gravel, crushed stones and macadam.

Applications in all branches of industry:

Chemical, pharmaceutical,
petrochemical industry, breweries,
wine cellars, diaries, foodstuff and
feedstuff industry, seeds, agricultural
industry, varnish, paint, rubber, wood
and plastics industry, recycling,
environment technology, construction
and building material industry.

Design and construction

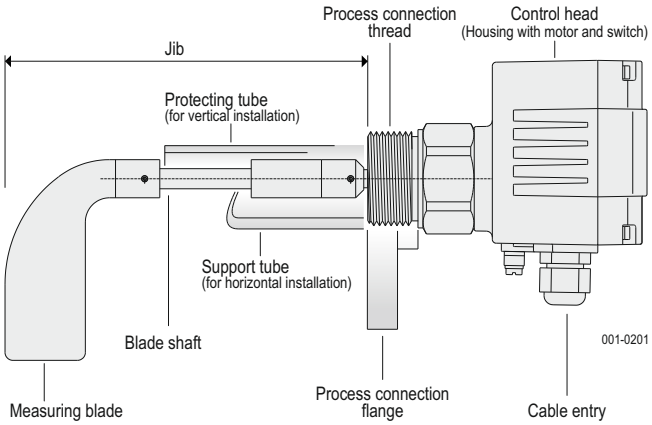

The **DF** construction set comprising:

Four housings,
many process connections,
diverse jib versions (with support and protecting tubes),
and **many sizes of measuring blades**

enables level indicators of many types to be designed and built to solve all tasks.

Function

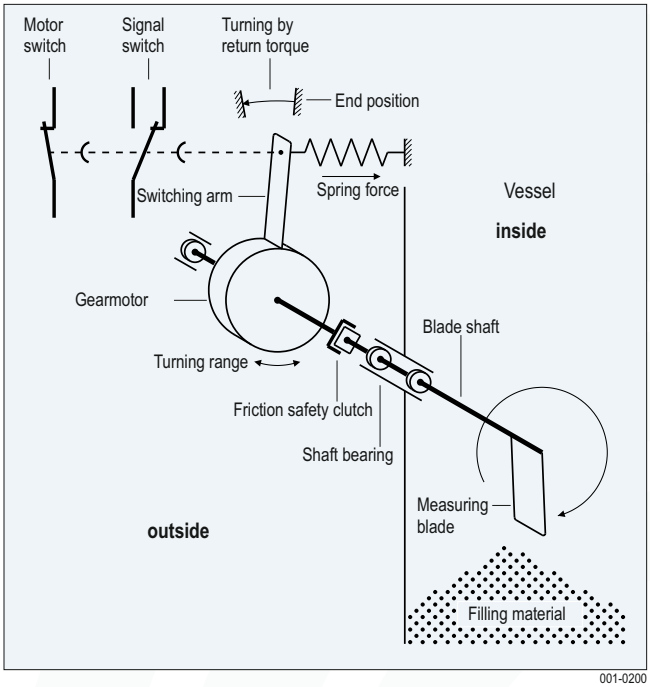

The rotating measuring blade projecting into the vessel is driven by a gearmotor.

When the bulk goods heap up to the level of the blade, this prevents the blade from turning and it comes to a standstill.

The return torque turns the fitted motor back from its end position and actuates the signal switch by a switching arm.

A second switch turns the motor delayed off.

Should the level of the bulk goods drop and the measuring blade can turn freely, a spring brings the motor back into its original end position.

At the same time the motor is turned on again and the signal switch is reset.

Self-monitoring

D1 Function monitoring (Rotation control)

The optional function monitoring system recognizes any occuring equipment fault at an early stage.

The following parameters are monitored:

Wire fracture
Voltage failure
DC/AC converter for motor voltage
Motor
Gear unit

D2 Voltage monitoring

The following parameters are monitored:

Wire fracture and
Voltage failure

D9 Function control (Rotation control)

As like as **D1** but with separate independent electronic and with permanent pulsating „all-right signal".

Technical data

Material	Housing **A1**	Aluminium
	Housing **A2**	Stainless steel KI 316
	Housing **A3**	Aluminium AlMgSi1
	Housing **A4**	Stainless steel 316 Ti
Material	Process connection	Aluminium or optional Stainless steel 304 or 316 Ti
Material	Shafts	Stainless steel 304 or 316 Ti
	Rope shafts	Stainless steel 316
	Measuring blades	Stainless steel 304 or 316 Ti
	Support tubes	Stainless steel 304 or 316 Ti
	Protecting cages	Stainless steel 304 or 316 Ti
	Protecting tubes	Stainless steel 304 or 316 Ti
Length tolerance	**L**	± 10 mm
Shaft bearing beginning with 4000 mm for **DF27**		Grooved ball bearings dustproof 1 axial bearing
Shaft sealing		Special seal rings according to MON *)
Material	Seal rings	
	R0	NBR, black (Standard)..... up to max. 80 °C
	R1	PTFE/VITON ..... up to max. 150 °C
	R2	NBR, white FDA ..... up to max. 80 °C
	R5	PTFE, white FDA ..... up to max. 260 °C
for **DF23** and **DF24**	**R6**	NBR, black (Standard)..... up to max. 80 °C
for **DF23** and **DF24**	**R7**	PTFE, white FDA ..... up to max. 260 °C
	R8	Graphit ..... up to max. 500 °C ... 1000 °C
Lubrication	Seal rings	**R0**, **R2** and **R6** food and FDA approved **R1**, **R5** and **R7** without lubrication
Sealing	**DF31** and **33**	by folding bellows, absolute tight
Gearing protection		Friction safety clutch for protection against torque peaks
Measuring blade speed	**U1**	1 rpm (Standard)
	U5	5 rpm
	U8	8 rpm (only for special applications)
Response delay	**U1**	approx. 1.20 sec. (Standard)
	U5	approx. 0.24 sec.
	U8	approx. 0.15 sec.
Response sensitivity		can be set by spring force or by geometry of the measuring blade (dependent on mounting position)
Signal delay	**D3**	Full indication delay
	D4	Empty indication delay
Type of protection	Housing	
	A1	**IP66**
	A2	**IP66**
	A3	**IP66** and flameproof enclosure „d"
	A4	**IP66** and flameproof enclosure „d"
Maintenance		**no** maintenance necessary

*) MON = MOLLET standard

Electrical data

Supply voltage	**C1**	220 ... 240 V ~ 50-60 Hz (AC)
	C2	110 ... 120 V ~ 50-60 Hz (AC)
	C3	48 V ~ 50-60 Hz (AC)
Supply	**C4**	24 V ~ 50-60 Hz (AC)
	C5	24 V ⎓ (DC) +10%/-15%
	C6	12 V ⎓ (DC) +10%/-15%
	C7	48V ⎓ (DC) +10%/-15%
Power consumption		**AC** = 4 VA **DC** = 4 W
Connection clamps		max. 1.5 mm²
Cable entry		Cable gland M20x1.5
Signal contact		Change-over contact, potentialfree
Capacity of the contact		1 mA/4 V DC ... 2 A/250 V ~ AC multivoltage and multicurrent switch suitable for low currents and voltages as well as for medium currents with control voltages up to 250 V ~AC
Contact		
Additional contact		Opener (with potential from the signal contact)
Option **D1, D2, D9**		(= Self-monitoring)
Option **D3, D4**		(= Signal delay)
Capacity of the contact		up to 2 A / 250 V ~ AC adapted to the switching capacity of the signal contact
Option **D9**		200 mA (with potential 24V DC only)
Protection class		I ⏚
Function display	**H1**	LED, 3 mm (optional for **DF11**)
under voltage		yellow
Vessel full		blue (top)
Vessel empty		green (bottom)
Rotation control		red
Signal lamp	**H2**	LED, 5 mm
with **DF21...DF33**		green, full or empty (transposable with connector)
Signal lamp, large	**H8**	multiple LED, green, 360 ° full or empty (transposable with connector)

Application data

Ambient temperature	**A1** and **A2**	-20 °C ... +70 °C	Ta
	A3 and **A4**	-20 °C ... +60 °C	
	Option **B2**	-20 °C ... +45 °C	
Bulk goods temperature	**E0**	-25 °C ... +80 °C (Standard)	T(Process)
	E1	-40 °C ... +150 °C	
	E2	-25 °C ... +200 °C	
	E3	-25 °C ... +260 °C	
	E4	-25 °C ... +500 °C (... +1000 °C)	
with heating	**E7**	...-35 °C **E74** ... -40 °C	
Vacuum and overpressure in vessels	**P0**	- 0.5 bar... 5 bar	p(Process)
	P1	- 0.5 bar...10 bar	
	P2	- 0.95 bar... 25 bar	
	P6	- 0.9 bar...10 bar	
	P7	- 0.9 bar...10 bar (Pressure separation)	

Housing versions

A1 Housing for all bulk goods and optionally for explosion hazardous areas

Dust

Compact housing in aluminium, **type of protection IP66.** RAL 7001 coated

B0 Standard = CE conform

Ex type of protection

B1 = Ex II 1/2D IIIC

B2 = Ex II 1D IIIC

B3 = Ex II 1/3D IIIB

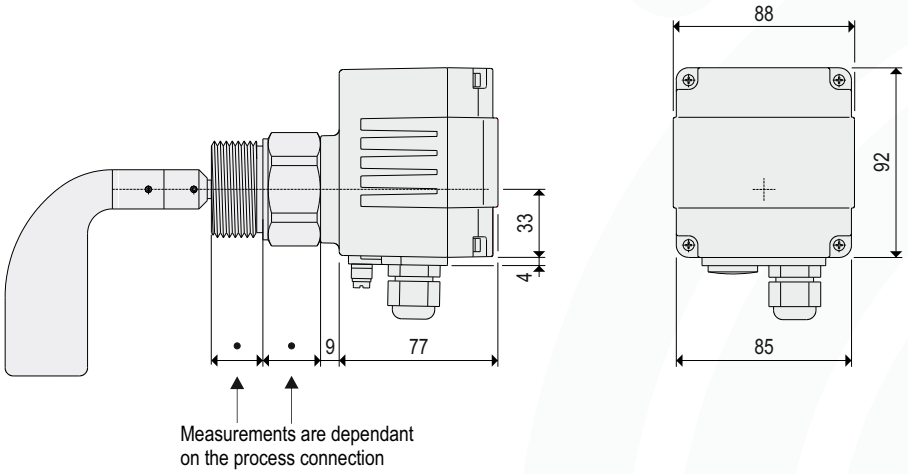

001-0202

A2 Housing for all bulk goods and optionally for explosion hazardous areas

Dust

Compact housing in stainless steel 1.4408 / KI 316, **type of protection IP66**

B0 Standard = CE conform

Ex type of protection

B1 = Ex II 1/2D IIIC

B2 = Ex II 1D IIIC

B3 = Ex II 1/3D IIIB

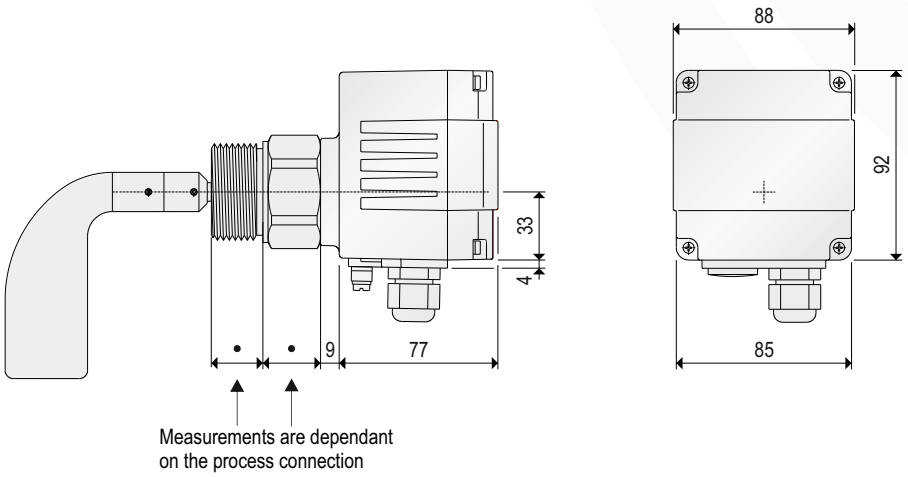

001-0203

Housing versions

A3 Housing for all bulk goods in gas explosion hazardous areas and for hybrid mixtures

Gas+Dust Ex and hybrid mixtures

Round housing in aluminium AlMgSi1, **type of protection IP66**, conductible anodised with clamping box in aluminium, RAL 7001 coated

Ex type of protection

A3CB1 = Ex **II 1/2D IIIC**
and **II 2G IIC**

A3CB2 = Ex **II 1D IIIC**
and **II 2G IIC**

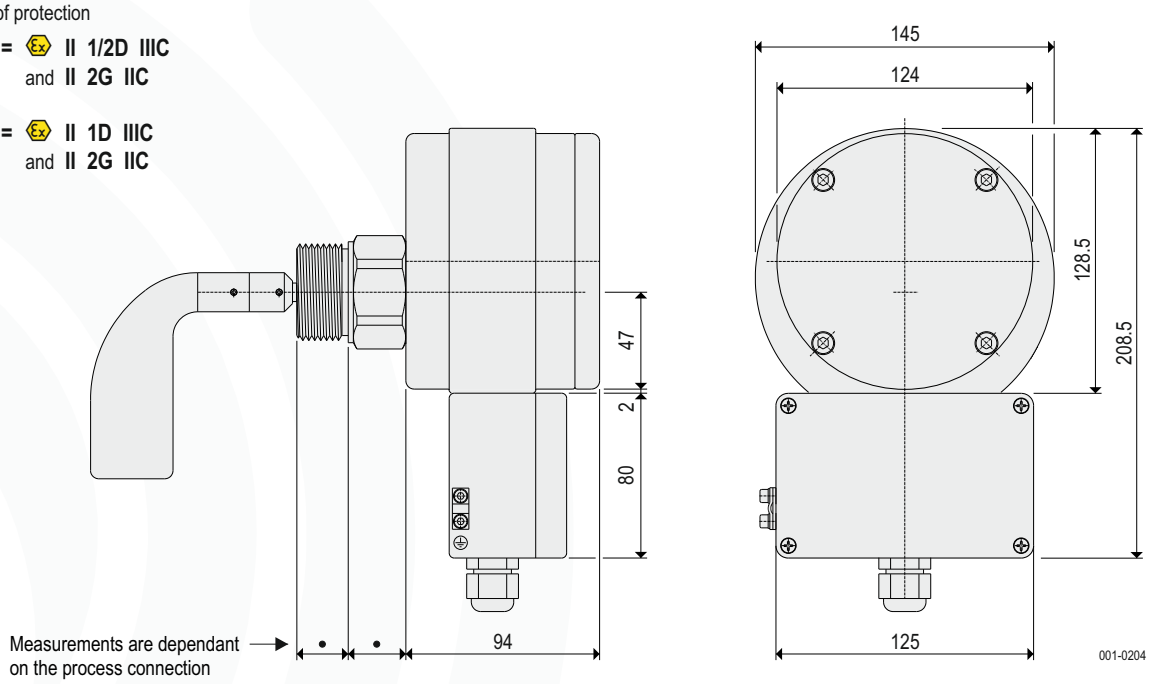

A4 Housing for all bulk goods in gas explosion hazardous areas and for hybrid mixtures

Gas+Dust Ex and hybrid mixtures

Round housing in stainless steel 1.4571 / 316 Ti, **type of protection IP66**, with clamping box in stainless steel 1.4404 / 316 L

Ex type of protection

A4CB1 = Ex **II 1/2D IIIC**
and **II 2G IIC**

A4CB2 = Ex **II 1D IIIC**
and **II 2G IIC**

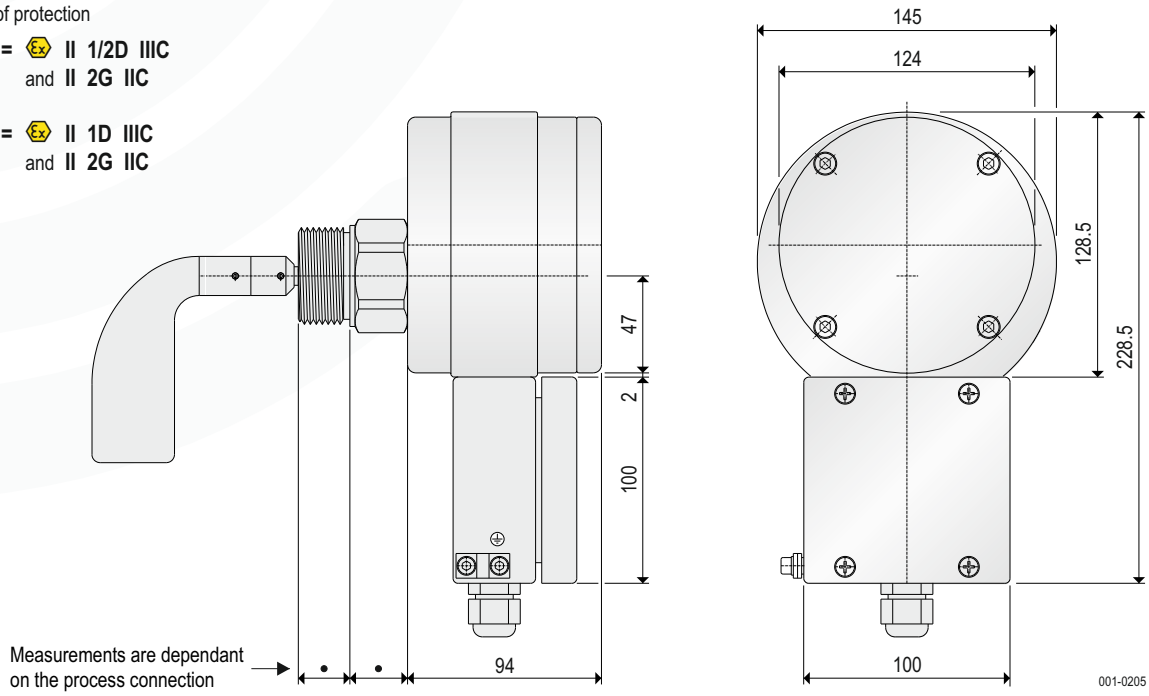

Temperature decoupling bell housing E1, E2, E3, E4 and E40

The temperature decoupling bell housing protects the control head against high bulk goods temperature resp. process temperature.

The temperature should be cooled down to 80 °C at the bottom of the control head by a cooling lane.

The level indicator is only permitted to operate with a maximum temperature of 80 °C, measured at the surface of the control head housing.

Application data

Ambient temperature		-20 °C ... +70 °C	T_a
Bulk goods temperature	**E1**	-40 °C ... +150 °C	$T_{(Process)}$
	E2	-20 °C ... +200 °C	
	E3	-20 °C ... +260 °C	
	E4	-20 °C ... +500 °C	
	E40	-20 °C ... +1000 °C	

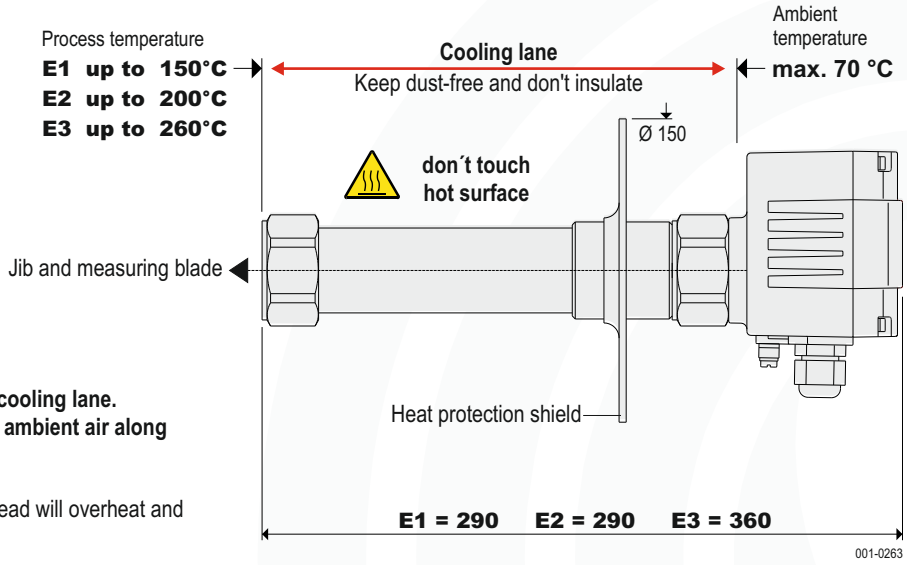

ATTENTION!

It's not allowed to mount any attachments at the cooling lane.
For a sufficient cooling the free circulation of the ambient air along the cooling lane is necessary.

If those instructions were not observed, the control head will overheat and this cause the loose of the device's performance.

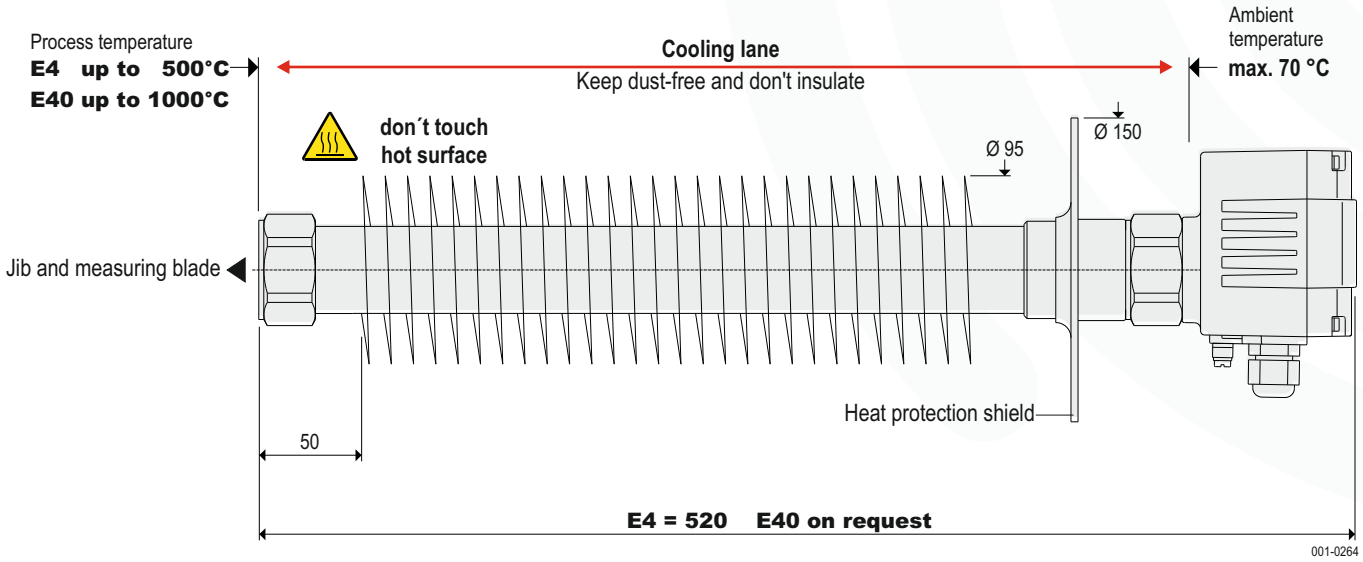

The Technical Data presented here are to be considered as maximum values, relating only to the equipment described herein.
Depending on the selection of options and instruments used, these data must be considered or reduced correspondingly.

Temperature decoupling bell housing E1, E2 and E3 - mounting instruction

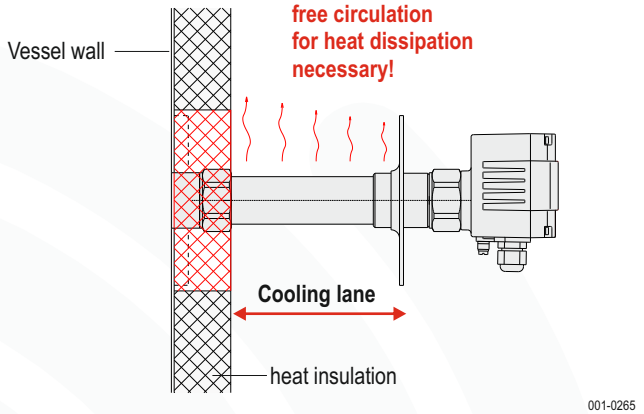

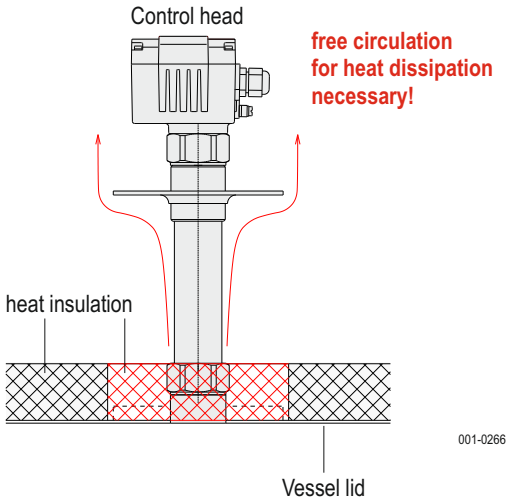

If it is mounted horizontal or inclined the device may be installed in a vessel without heat insulation.

The cooling lanes are designed for an heat insulation of about 50 mm. If the heat insulation is thicker the cooling lane has to be prolonged.

When vertical mounted an heat insulation as protection against to much heat emission is absolutely necessary.

The heat insulation has to be continuous (red) so that less heat will get above to the control head.

Temperature decoupling bell housing E4 and E40 - mounting instruction

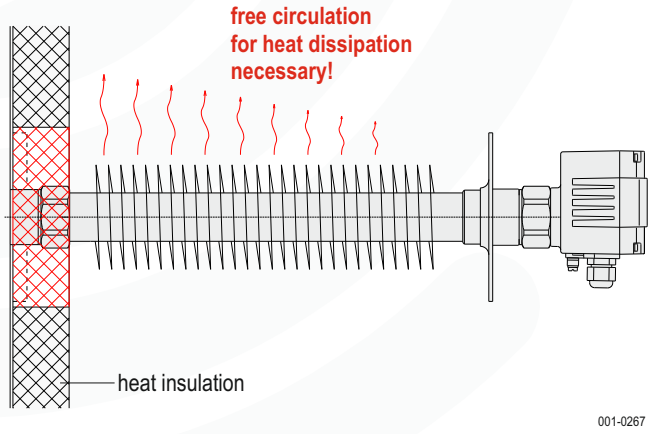

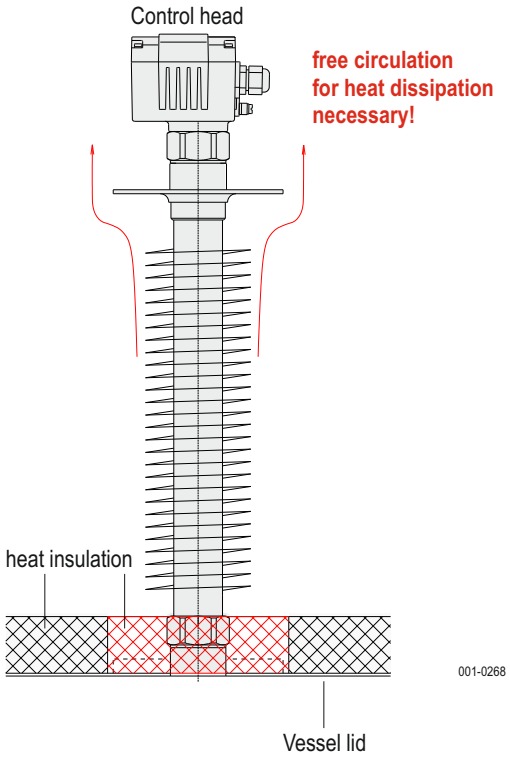

If it is mounted horizontal or inclined the device may be installed in a vessel without heat insulation.

The cooling lanes are designed for an heat insulation of about 50 mm. If the heat insulation is thicker the cooling lane has to be prolonged.

When vertical mounted an heat insulation as protection against to much heat emission is absolutely necessary.

The heat insulation has to be continuous (red) so that less heat will get above to the control head.

Area separating Element DF-P2

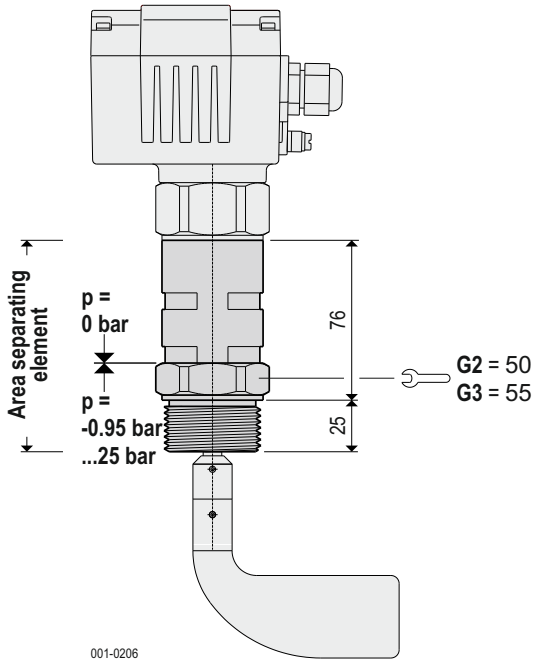

Because of the absence of shaft glands the area separating element is absolutely gas-tight and leakage-free.

The measuring blade is driven without contact by the control head via a magnetic coupling of two rotors equipped with magnets. Between the rotors there is a bulkhead seal the process space. Thus, no gases may enter the interior of the control head or the environment.

Housing material	1.4571 / 316 Ti
Process connection	G1¼ (**G2**) oder G1½ (**G3**) and all flanges
Bulk goods temperature	-25 °C ... +180 °C $T_{(Process)}$
Vessel pressure	-0.95 bar ... 25 bar $p_{(Process)}$ higher pressure on demand
Response delay	**U1** (**Standard**) approx. 3 sec **U5** approx. 0.60 sec

The Technical Data presented here are to be considered as maximum values, relating only to the equipment described herein.
Depending on the selection of options and instruments used, these data must be considered or reduced correspondingly.

Annular gap flushing and overpressure enclosing DS

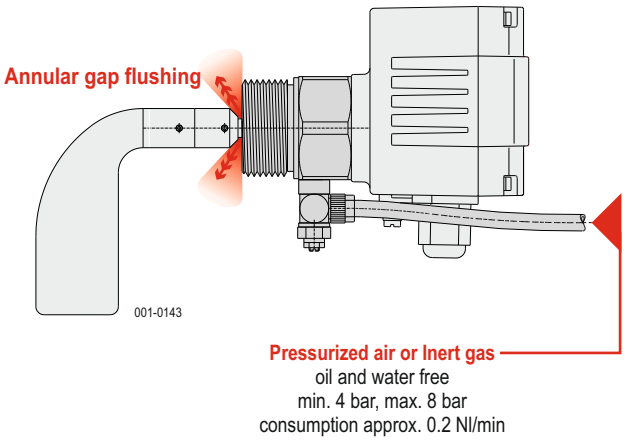

The flushing system of the annular gap prevents jamming of the annular lip-type seal and clears the gap.

The positive pressure housing protects the shaft bearing from infiltration of moisture from wet, oily or sticky bulk goods.

For flushing, pressurized air or inert gas may be used.

For use with any process connection and the following seal rings:

R1DS	
R5DS	
R7DS	with **DF23** and **DF24**
R8DS	with **E4** (High temperature)

Bulk goods temperature	-25 °C ... +500 °C $T_{(Process)}$
Vessel pressure	-0.5 bar ... 5 bar $p_{(Process)}$ higher pressure on demand
Pressure of the flushing gas	min. 2 bar over the “Pressure in vessel”

Level adjustment DF-HVP

Using the level adjustment device, various filling levels in the vessel can be adjusted continuously.

Adjustable lenght depending on jib lenght according to choice of options **DF28.**
For slant or horizontal mounting position, maximum lenght 1000 mm, only with option **KD** (Bearing and shaft seal ring at the end of the pipe).

Measuring blade depending on choice of options **DF28**

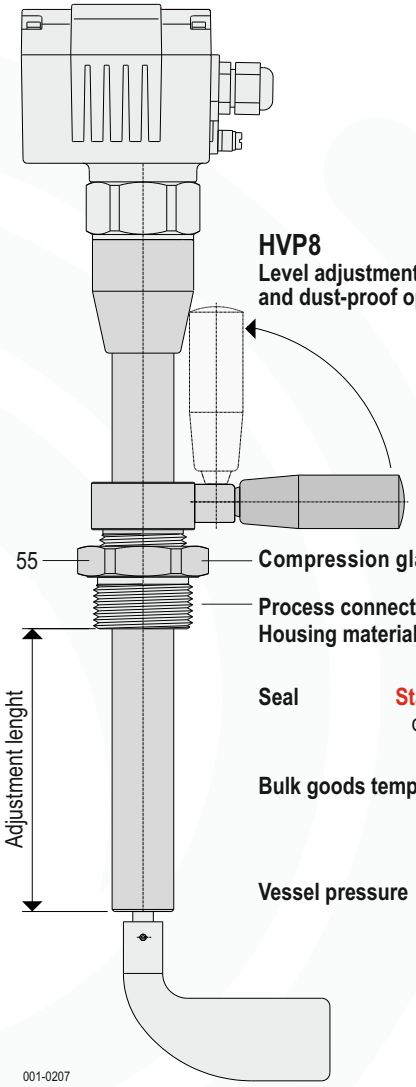

HVP8
Level adjustment for pressure-tight and dust-proof operation

Hinged lever handle for tensioning compression gland.

Compression gland		
Process connection		G1½ (**G3**)
Housing material		1.4301 / 304 or 1.4571 / 316 Ti
Seal	Standard	NBR, black
	optional	Silicon,white FDA
Bulk goods temperature		-25 °C ... +150 °C $T_{(Process)}$
Vessel pressure		-0.9 bar ... 1 bar $p_{(Process)}$

The Technical Data presented here are to be considered as maximum values, relating only to the equipment described herein.
Depending on the selection of options and instruments used, these data must be considered or reduced correspondingly.

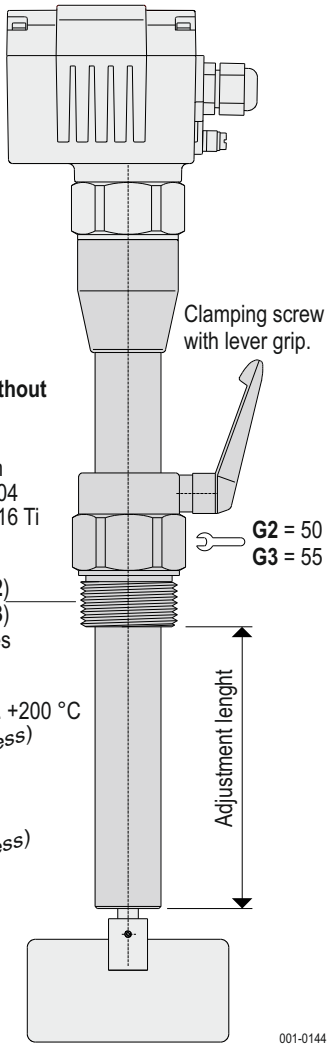

HVP9
Level adjustment for operation without pressure and dust.

Housing material		Aluminium
	or	1.4301 / 304
	resp.	1.4571 / 316 Ti
Process connection		G1¼ (**G2**)
	or	G1½ (**G3**)
	and	all flanges
Bulk goods temperature		-25 °C ... +200 °C $T_{(Process)}$
Vessel pressure		±0 bar $p_{(Process)}$

Vibration dampening DF-VD

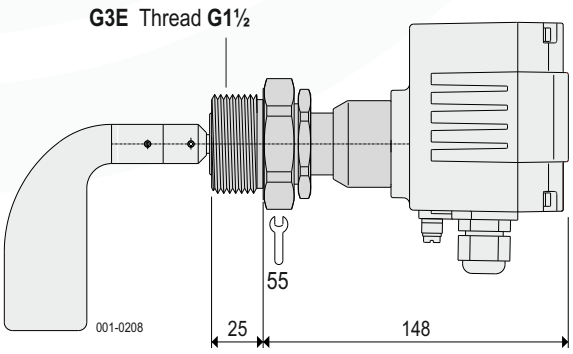

For use of level indicators close to vibrators or beaters. Is dampening vibration an absorbs impacts transmitted to the indicator.

Housing Material		1.4301 / 304 or 1.4571 / 316 Ti
Seal	Standard	NBR, black
	optional	Silicon, white FDA
Process connection		G1½ (**G3E**) Flanges on demand
Bulk goods temperature		-25 °C ... +150 °C $T_{(Process)}$
Vessel pressure		-0.5 bar ... 2 bar $p_{(Process)}$

Process connection - Threads

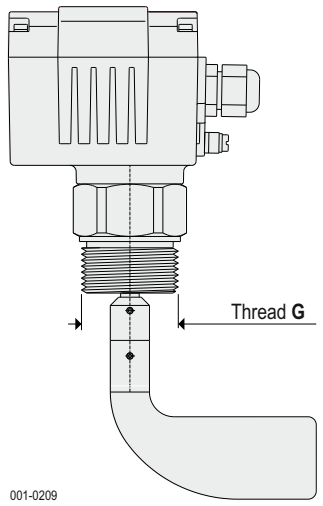

	G1	G2	G3	G4	G5	G6
	G1	G1¼	G1½	G2	M30	M32
DF11	X	X	X		X	X
DF21	X	X	X		X	X
DF22	X	X	X			
DF23		X	X	X		
DF24				X		
DF26		X	X			
DF27		X	X			
DF28		X	X			
DF29		X	X			
DF30	X		X			
DF31			X			
DF33			X			

G to DIN ISO 228 M fine thread, 1.5 mm pitch

Installation variations

1. Calibre **2. Socket**

Observe the blade size

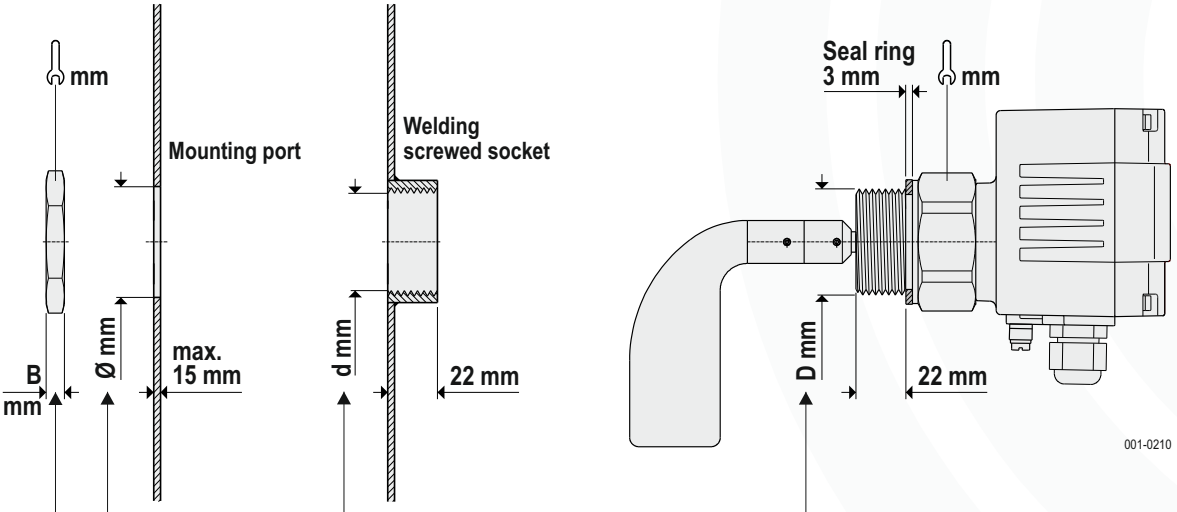

	G1	G2	G3	G4	G5	G6
	G1	G1¼	G1½	G2	M30	M32
D mm	33.25	41.91	47.80	59.61	30.00	32.00
d mm	30.29	38.95	44.85	56.66	28.38	30.35
Ø mm	35.00	44.00	50.00	62.00	32.00	34.00

G to DIN ISO 228 M fine thread, 1.5 mm pitch

Hexagonal-nuts

Type	DF-SM1	DF-SM2	DF-SM3	DF-SM4	DF-SM5	DF-SM6
B mm	6	8	8	10	6	6
mm	41	50	55	70	41	41

Process connection - Flanges

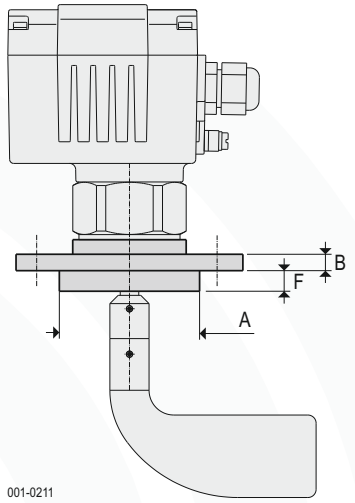

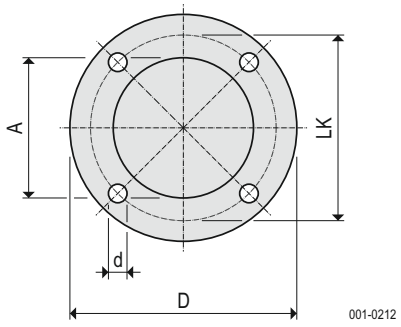

	Flange	D	B	A	F	LK	d	Quantity
F1A	F70	110	8	69	10	90	9	4
F1E	F70	110	8	69	10	90	9	4
F5E	DN32 PN10	140	16	78	2	100	18	4
F6E	DN100 PN6	210	16		0	170	18	4
F7E	DN100 PN16	220	20		0	180	18	8

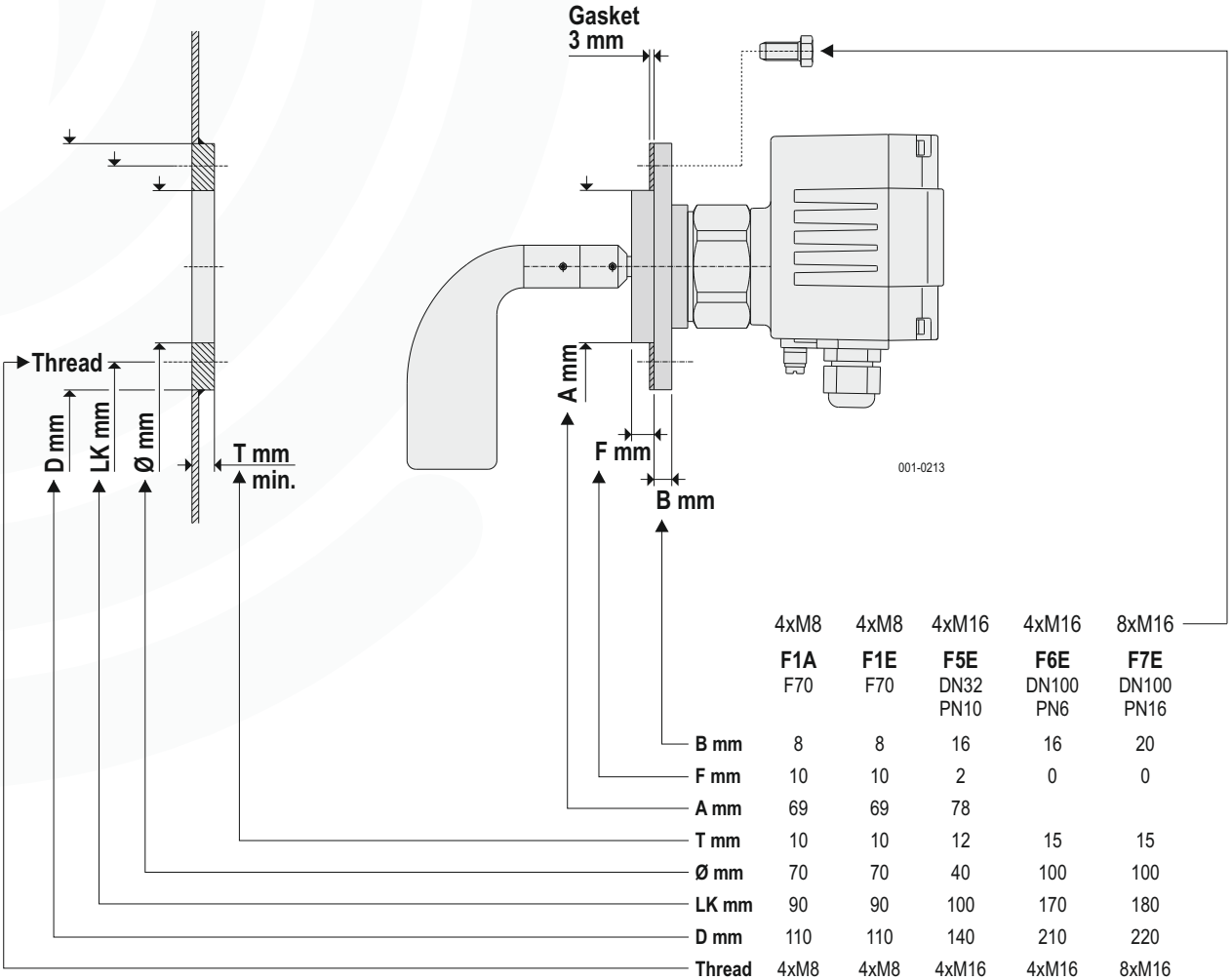

	4xM8	4xM8	4xM16	4xM16	8xM16
	F1A F70	**F1E** F70	**F5E** DN32 PN10	**F6E** DN100 PN6	**F7E** DN100 PN16
B mm	8	8	16	16	20
F mm	10	10	2	0	0
A mm	69	69	78		
T mm	10	10	12	15	15
Ø mm	70	70	40	100	100
LK mm	90	90	100	170	180
D mm	110	110	140	210	220
Thread	4xM8	4xM8	4xM16	4xM16	8xM16

Process connection - Flanges F2

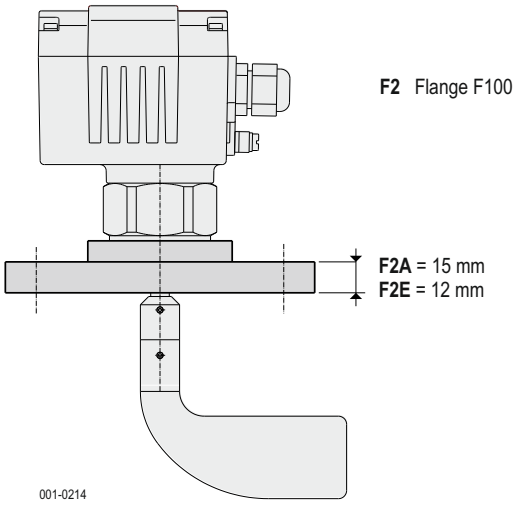

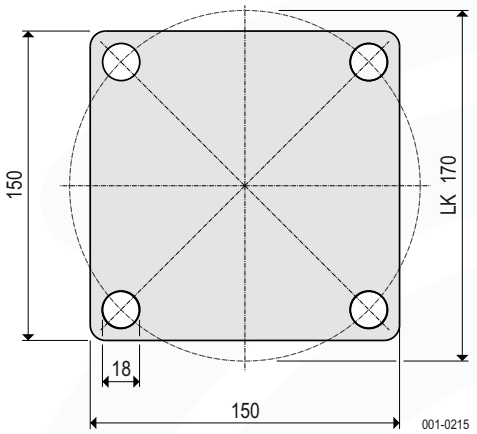

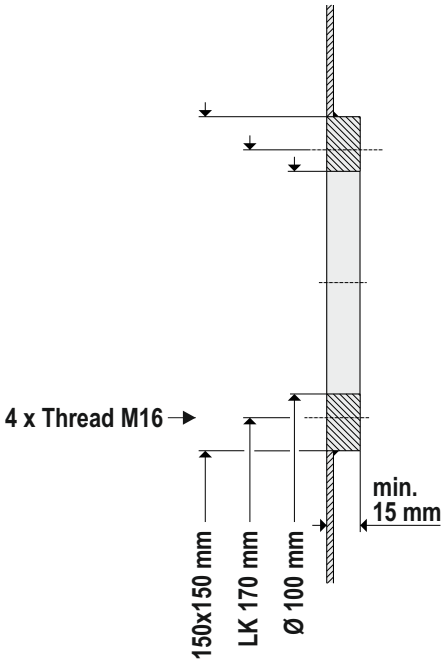

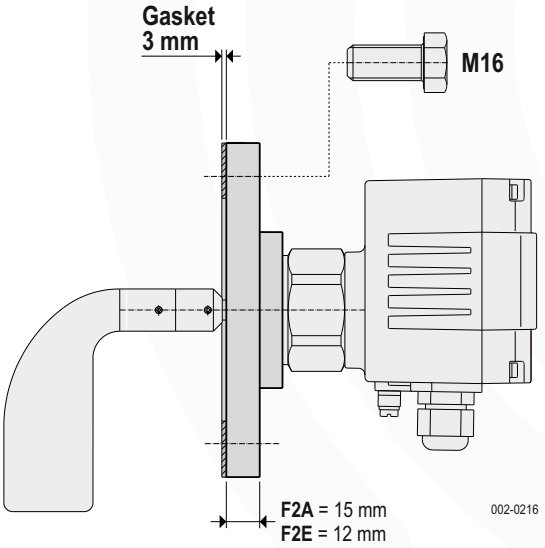

Hexagonal nuts SM

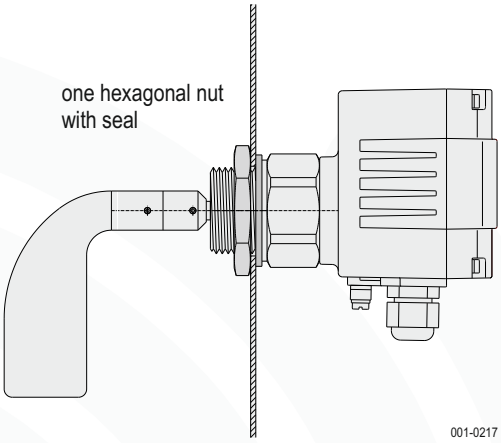

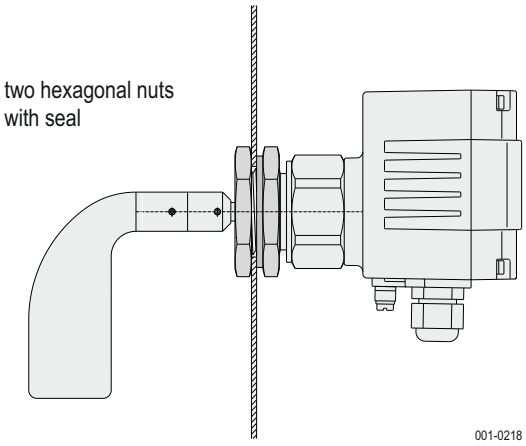

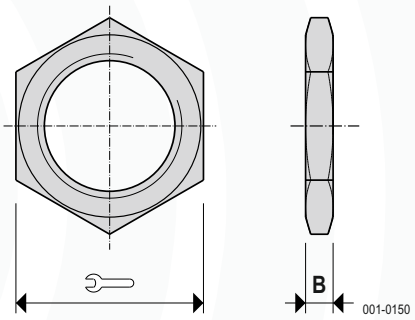

			B	
SM1	**G1**	41	6	**G1**
SM2	**G1¼**	50	8	**G2**
SM3	**G1½**	55	8	**G3**
SM4	**G2**	70	10	**G4**
SM5	**M30x1.5**	41	6	**G5**
SM6	**M32x1.5**	41	6	**G6**

Seals for process connections DR

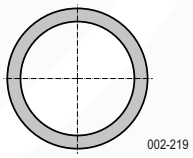

	Thread
DRG1	G1
DRG2	G1¼
DRG3	G1½
DRG4	G2
DRG5	M30
DRG6	M32
DRG7	G½
DRG8	G¾

DRF1
DRF5
DRF6
DRF7

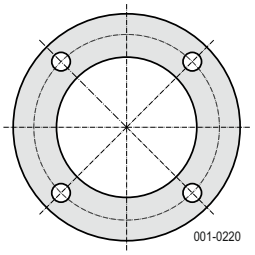

DRF2

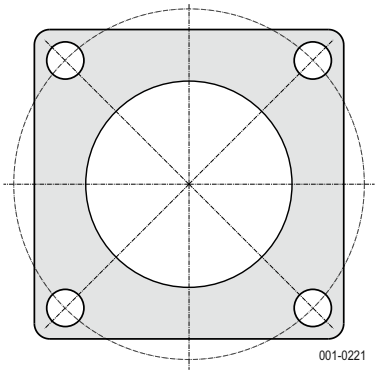

Storz couplings

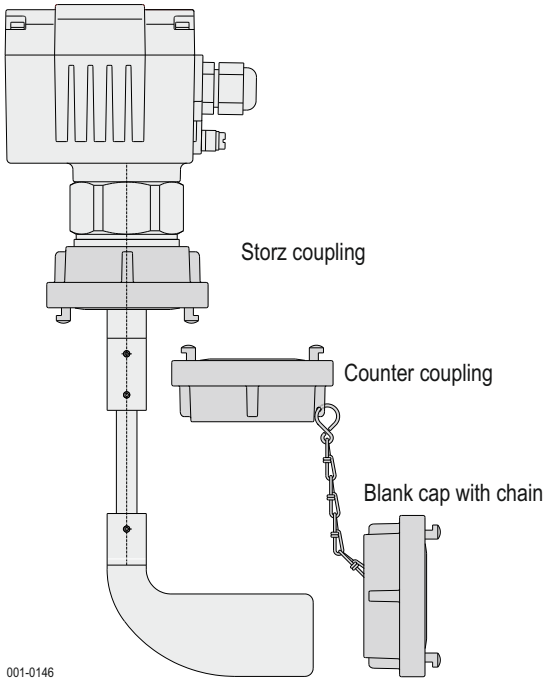

Level indicator with Storz type bayonet coupling.
For installation of the level indicator into regularly changing vessels or containers for “full” and “empty” messages during filling and emptying.

Quick and easy installation and removal without tools.

Coupling size	Storz 52 / 1½
Counter coupling	K-FSZ052IG2 AL for attaching to the vessel
Blank cap	K-BSZ052-00-AL for proof closure from the vessel
Material	AlMgSi1
Seal rings	NBR, white FDA
Bulk goods temperature	-25 °C ... +80 °C $T_{(Process)}$
Vessel pressure	-0.9 bar ... 10 bar $p_{(Process)}$

KAMLOK couplings

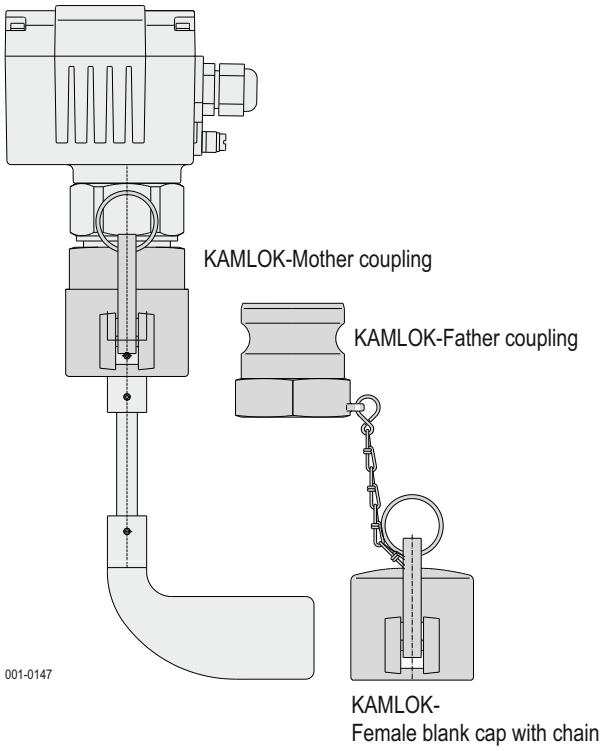

Level indicator with KAMLOK type coupling.
For installation of the level indicator into regularly changing vessels or containers for “full” and “empty” messages during filling and emptying.

Quick and easy installation and removal without tools.

Coupling size	KAMLOK DN 50 / 2
Father coupling	K-AVKI050IG2 VA for attaching to the vessel
Female blank cap	K-AMB050 VA for proof closure from the vessel
Material	1.4401 / 316
Seal rings	VITON
Bulk goods temperature	-25 °C ... +150 °C $T_{(Process)}$
Vessel pressure	-0.9 bar ... 10 bar $p_{(Process)}$

The Technical Data presented here are to be considered as maximum values, relating only to the equipment described herein.
Depending on the selection of options and instruments used, these data must be considered or reduced correspondingly.

Dairy coupling F42

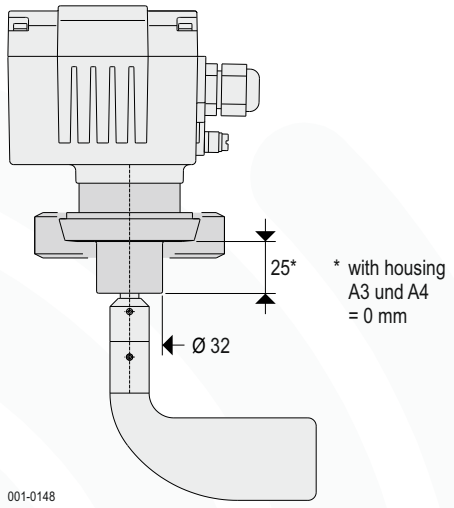

Level indicator with conical adapter and corresponding groove nut for dairy coupling.
For installation of the level indicator into vessels which must be cleaned for hygienic reasons, or for quick removal of the indicators when the vessels are changed.

Coupling size		Dairy coupling DN 50 / 2
Material	Conical adapter	1.4571 / 316 Ti
	Groove nut	1.4404 / 316 L
Vessel pressure		-0.9 bar ... 10 bar $p^{(Process)}$

Clamp Connection F46

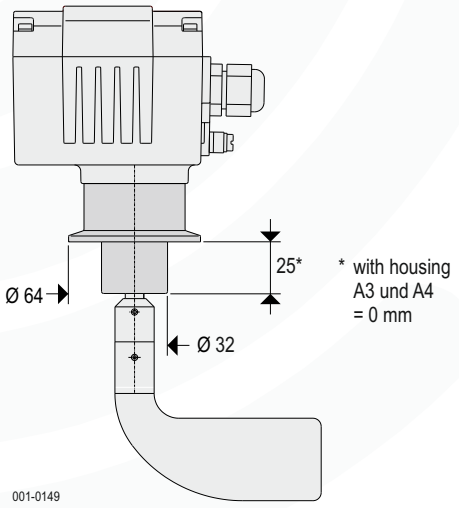

Level indicator with clamp connection.
For installation of the level indicator into vessels which must be cleaned for hygienic reasons, or for quick removal of the indicators when the vessels are changed.

Clamp size	DN 50 / 2
Material	1.4571 / 316 Ti
Vessel pressure	-0.9 bar ... 10 bar $p^{(Process)}$
Clamp seal	not in the delivery extent

The Technical Data presented here are to be considered as maximum values, relating only to the equipment described herein.
Depending on the selection of options and instruments used, these data must be considered or reduced correspondingly.

Flanges for textile silos MG2

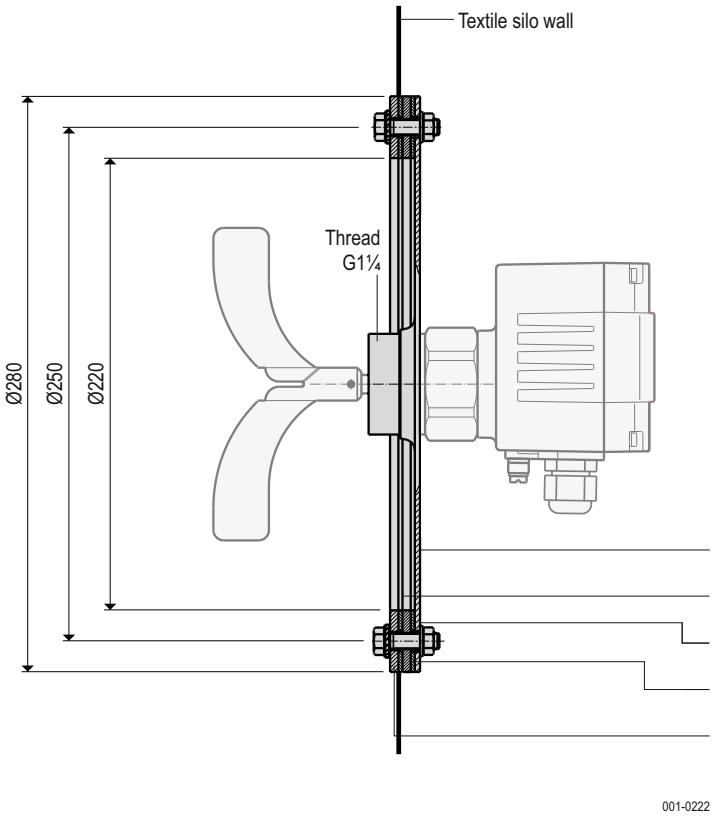

Mounting flange with G1¼ connection thread for installing the level indicator into flexible bag silos.

Large installation port for blades up to 215 mm.

The large base area diameter amounting to 280 mm prevents false reports upon relaxation of the silo walls.

Material	Steel, galvanised
Connection thread	G1¼ (**G2**)
Seal ring	NBR, white FDA

Mounting flange comprising:

7 Flange with thread G1¼ (**G2**)
5 Seal ring Ø280 mm
6 Flange ring with borehole for outside
5 Seal ring Ø280 mm
3 Flange ring with borehole for inside
Scrwes, nuts and washers

Tools for the installation

For screwing into the vessel, use the right tools.

Art.-Nr.	**Material** Steel, galvanised
GS41	41
GS46	46
GS50	50
GS55	55

or preferably use the KNIPEX plier wrench

Art.-Nr.	Spanning mm up to
86 03 250	46
86 03 300	60

For opening the housings or clamping boxes, use a

Cross-tip	or	Flat-bladed screwdriver
PH 2		**1.0 x 6.0**

For attachment in housings **A1** and **A2**, use a

Cross-tip	or	Flat-bladed screwdriver
PH 0		**0.6 x 3.5**

For attachment in clamping box **A3** and **A4** use a Flat-bladed screwdriver

0.6 x 3.5

Spanner wrench for tightening the cable connection made of

Plastic	Metal (ATEX)
24	**22**

Weather protection hood SH

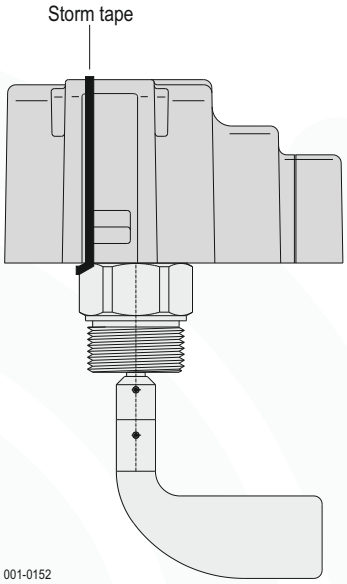

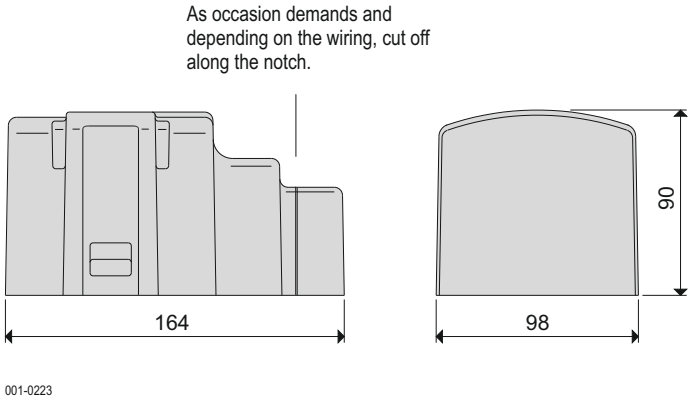

Weather protection hood for outdoor use.
Protection against control head overheating and prevents the inside of the housing from development of condensation.

Materials	Hood	PVC, RAL 7001
	Storm tape	EDPM, weather-resisting

Protection from condensation SDK

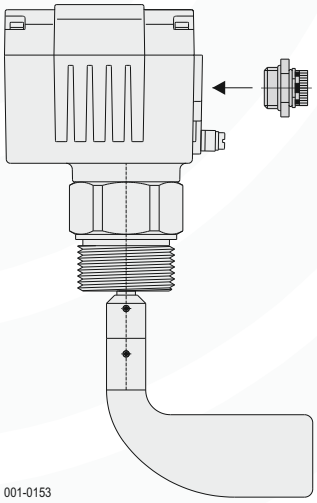

Condensate protection valve for insertion into a threaded hole.
A watertight but vapour-permeable membrane prevents condensate formation in the interior of the housing.

Material		Polyamide
	Seals	VITON
Connection thread		M20
Type of protection		**IP66**

The Technical Data presented here are to be considered as maximum values, relating only to the equipment described herein.
Depending on the selection of options and instruments used, these data must be considered or reduced correspondingly.

Electrical connection

Electrical connection is to be made in accordance with circuit diagram.

ATTENTION!
Make absolutely certain that the cable fits firmly in the union.

Symbol signification

- = full
- = empty
- = error

Potential compensation

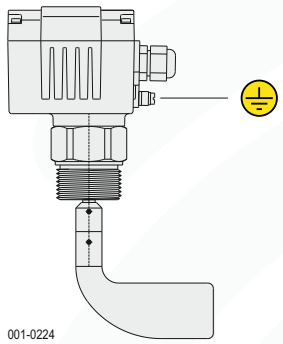

Connect grounding terminal with equalised potential of the complete plant.

Circuit diagram AC

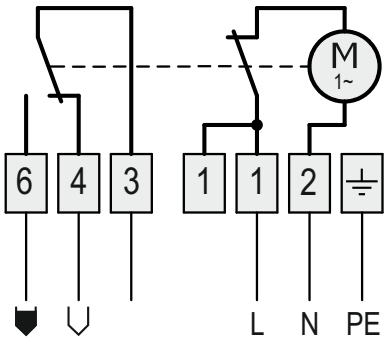

001-AP00

Circuit diagram AC with monitoring D1, D2

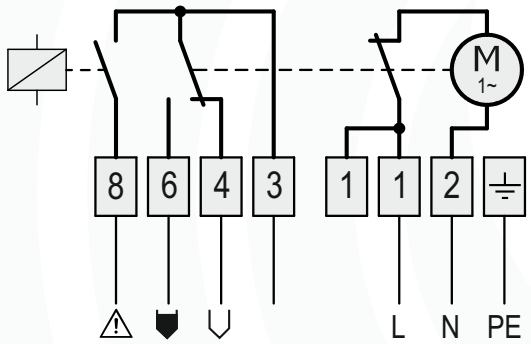

001-AP01

Circuit diagram DC

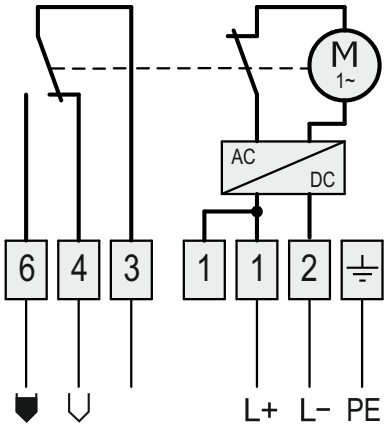

001-AP02

Circuit diagram DC with monitoring D1, D2

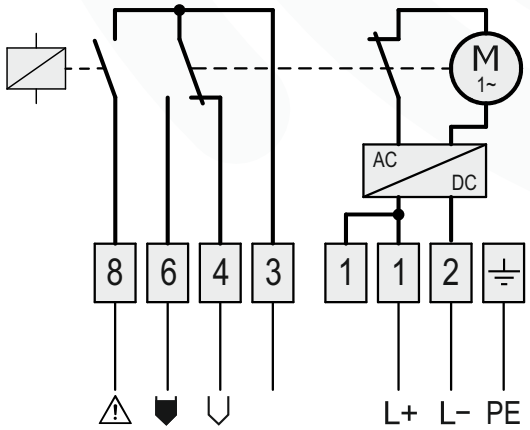

001-AP03

ATENTTION! Level indicator is always to be brought into circuit so that no undesirable switching function can occur in the case of mains voltage failure.

Electrical connection with plug

DF-ST3 connector 3-pin + PE

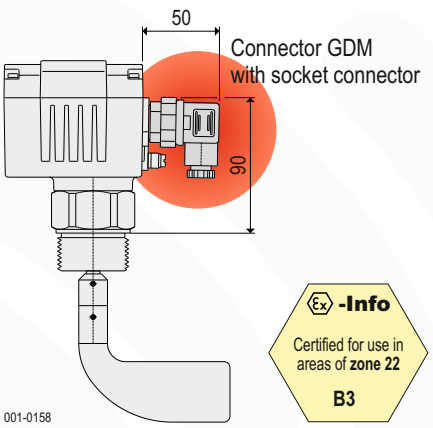

DF-ST1 connector 3-pin + PE
DF-ST2 connector 4-pin + PE

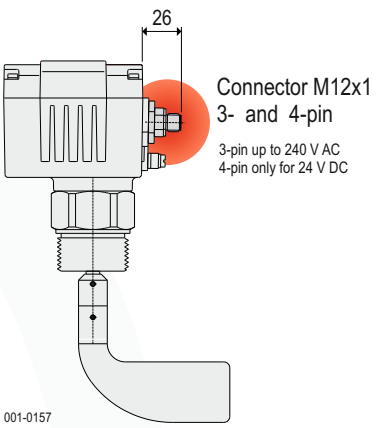

DF-ST5 connector 5-pin + PE

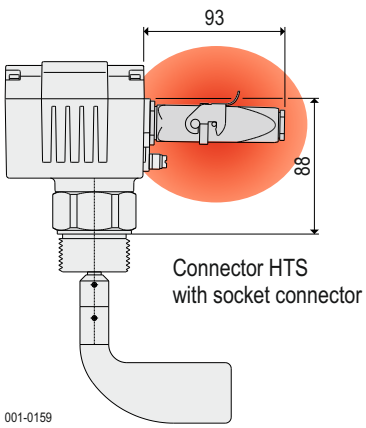

Circuit diagram for connector 3-pin + PE

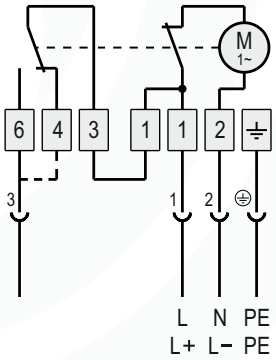

Circuit diagram for connector 4-pin + PE

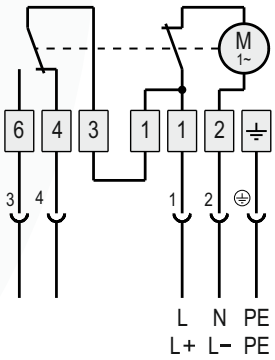

Circuit diagram for connector 5-pin + PE

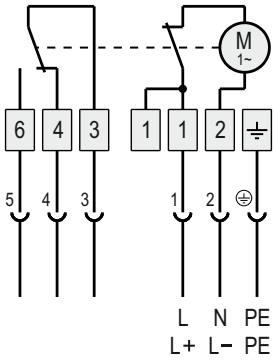

Circuit diagram for connector 3-pin + PE with monitoring D1, D2

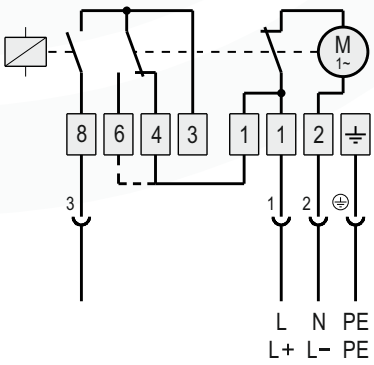

Circuit diagram for connector 4-pin + PE with monitoring D1, D2

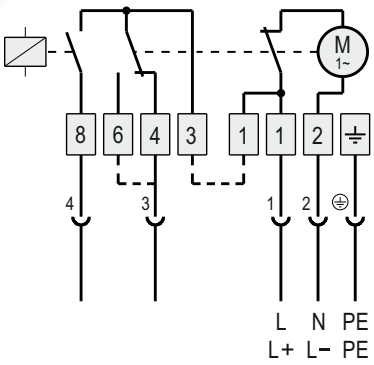

Circuit diagram for connector 5-pin + PE with monitoring D1, D2

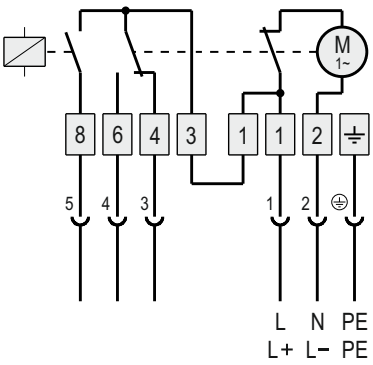

full line = wiring at the works broken line = possible wiring

Signal delay - Empty indication

Option D3 retards the empty indication

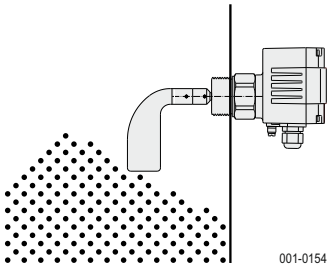

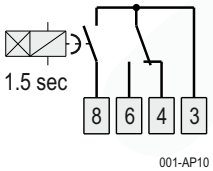

Switching position by empty indication
(Measuring blade is rotating)
and after the delay.

Upon sagging of the bulk goods, the “empty” message at terminal 8 is delayed for 1.5 seconds.

Relay contact to terminal 8 opens with a delay of 1.5 sec after contact with terminal 4 has been engaged.

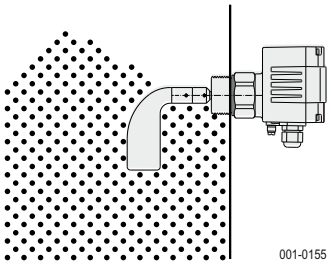

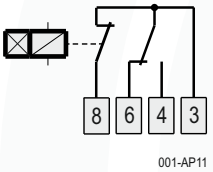

Switching position by
Full indication - ”not empty”.
(Measuring blade has stopped)

When the level of the bulk goods rises (”full” message), the relay contact engages immediately without delay.

Circuit diagram AC with signal delay D3

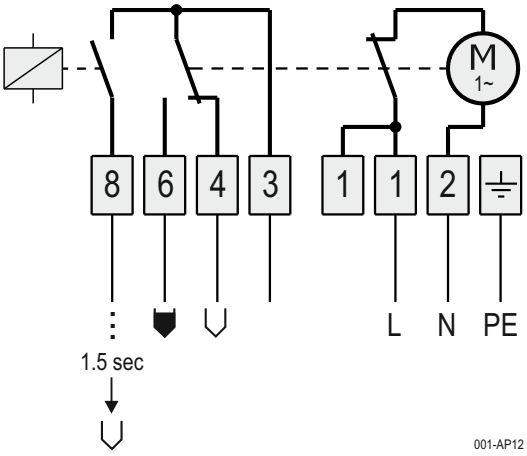

safety-focused connection from terminal 3 to terminal 8
“full” is cancelled - stop emptying

Circuit diagram DC with signal delay D3

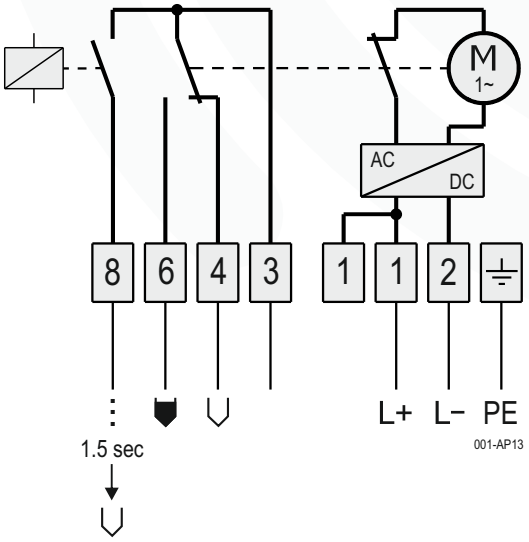

ATTENTION! Level indicator is always to be brought into circuit so that no undesirable switching function can occur in the case of mains voltage failure.

Signal delay - Full indication

Option D4 retards the full indication

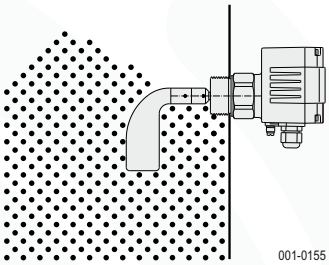

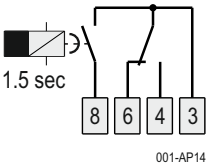

Switching position by “full” indication
(Measuring blade has stopped)
and after delay

When the level of the bulk goods rises, the “full” message at terminal 8 is delayed for 1.5 seconds.

Relay contact to terminal 8 opens with a delay of 1.5 sec after contact with terminal 4 has been engaged.

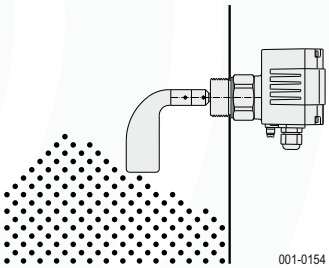

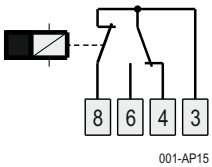

Switching position by
Empty indication- ”not full”.
(Measuring blade is rotating)

When the level of the bulk goods falls (”empty message”), the relay contact engages immediatley without delay.

Circuit diagram AC with delay D4

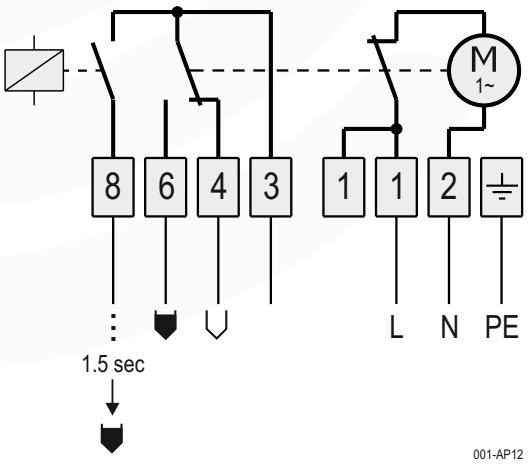

safety-focused connection from terminal 3 to terminal 8
“empty” is cancelled - stop filling

Circuit diagram DC with delay D4

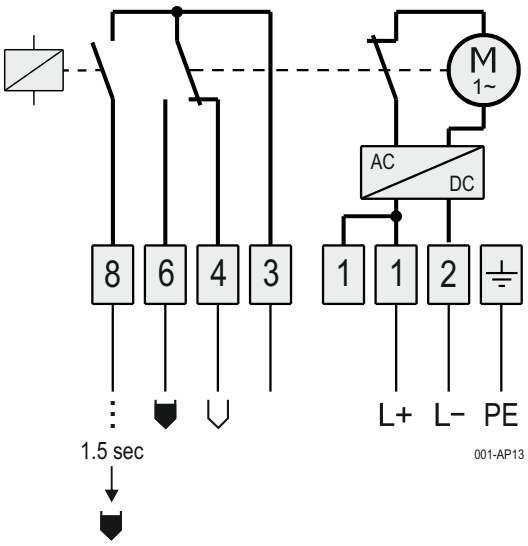

ATTENTION! Level indicator is always to be brought into circuit so that no undesirable switching function can occur in the case of mains voltage failure.

Function control D9 (Rotation control)

Empty indication

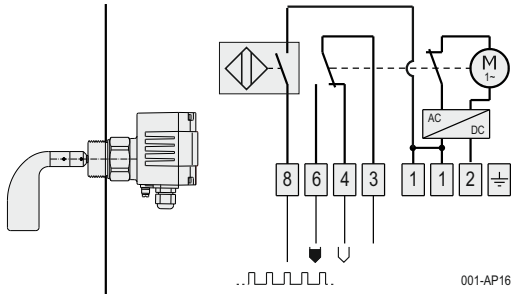

Full indication

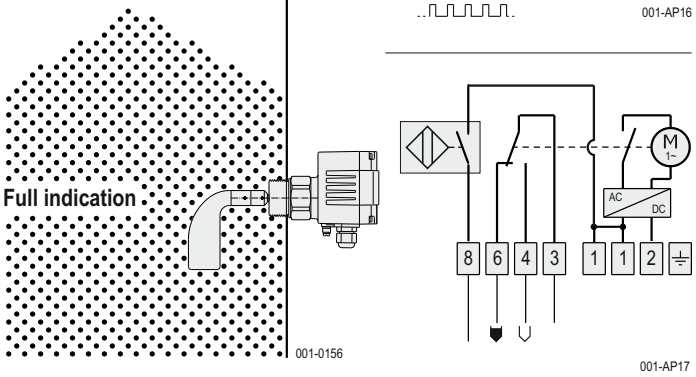

The function control option detects device errors early, using a separate independent electronic system.
The latter outputs a pulsating signal at terminal 8 while the blade shaft is rotating.

The following are monitored:
- **Cable break**
- **Voltage failure**
- **DC/AC-converter for motor voltage**
- **Motor and transmission**
- **Rotation of the blade shaft**

Please take notice!

If the device signals “full”, the motor is switched off (voltage on terminal 6), the blade shaft stops rotating, and thus for the time of the “full” message no pulsating signal is produced.

Device is in idle mode.
No defect!!!

Error signal

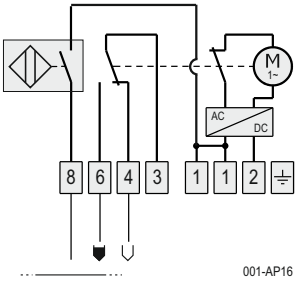

Device error displayed

If there is a device error, or if the supply voltage is absent, the pulsation of the signal is interrupted, signalling the error.

Circuit diagram

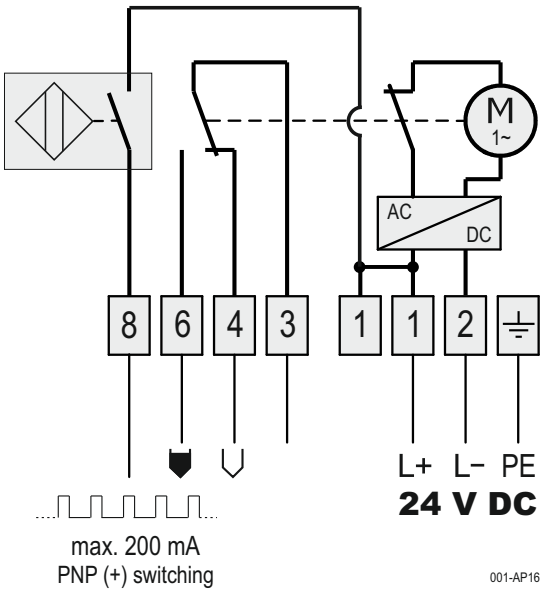

Pulse repetition

U1 (Standard = 1 U/min)
Pulse duration ca. 2.5 sec
Pulse pause ca. 17.5 sec
= 3 pulse/min

U5 (5 U/min)
Pulse duration ca. 0.5 sec
Pulse pause ca. 3.5 sec
= 15 pulse/min

ATTENTION! Level indicator is always to be brought into circuit so that no undesirable switching function can occur in the case of mains voltage failure.

Appliance heating

The lubrication of the transmission (Grease) is designed for temperatures as low as -25 °C. Still lower temperatures render the grease so stiff and viscous that the motor cannot be started.

For this reason, the level indicator must be heated if the temperature is below -25 °C.

Appliance data

Ambient temperature

with appliance heating	**E7**	-35 °C ... +70 °C	T_a
with appliance heating	**E74**	-40 °C ... +70 °C	

Bulk goods temperature

with appliance heating	**E7**	up to -35 °C	$T_{(Process)}$
with appliance heating	**E74**	up to -40 °C	

Appliance heating E7

As long as the motor is switched on, the waste heat of the motor is enough to keep the transmission sufficiently warm.

If the motor is switched off in case of a “full” message, a heating system is switched on to warm the transmission if option **E7** has been selected.

Attention! with appliance heating E7

The level indicator must be continuously supplied with power.
Otherwise the motor will cool down too much and cannot be restarted without external warming up.

After power failure of > 0.5 hours and temperatures below -25°C the device must be warmed up before starting.

Circuit diagram AC with appliance heating E7

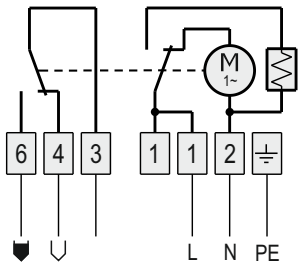

001-AP18

Circuit diagram DC with appliance heating E7

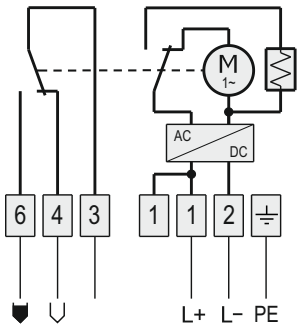

001-AP19

Appliance heating E74

If the level indicator is turned on (Voltage on) in cold condition (e.g. with a temperature of -40 °C):

- The control head is heating to a proper operating temperature first before the function of level indicating will be activated.
- During this heating up period no voltage is on terminal 8 and it is signalizing “**Device is not in operation**”.
- By reaching the operating temperature after about 20 up to 30 minutes the temperature control turns the function of the level indicator on.
- The signal “Device not in operation” switches off. (Voltage on terminal 8).
- During the whole operating time the electronic controls the optimal temperature for a trouble-free operation.

Circuit diagram DC with appliance heating E74

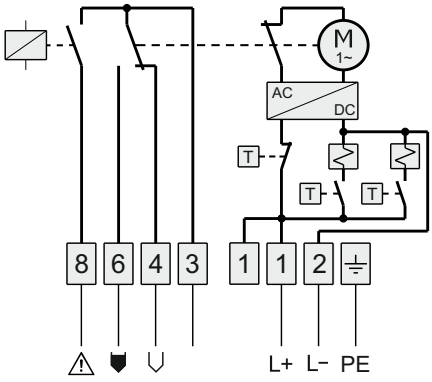

24 V DC

ATTENTION! Level indicator is always to be brought into circuit so that no undesirable switching function can occur in the case of mains voltage failure.

Switching logics, function displays and signal lamps

Symbol signification

- = under voltage
- = full
- = empty
- = Rotation control
- = LED "OFF"
- = LED "ON"
- = Relay actuated
- = Relay without currrent

Arrangement and colours of the four function LEDs

yellow — blue
red — green

Switching logics and function displays

Standard
Option **H5** and **H6** with **DF11**

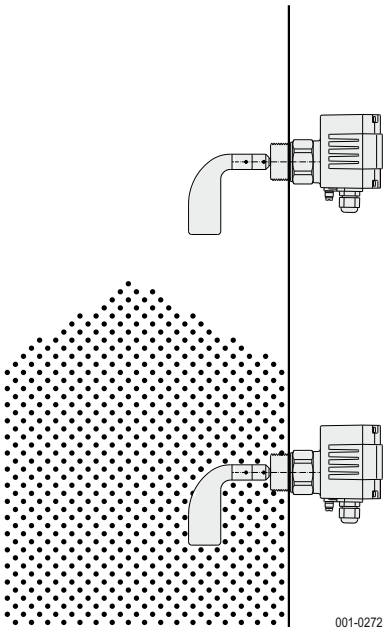

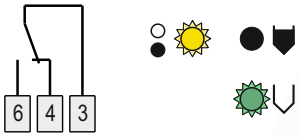

001-AP20

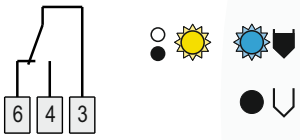

001-AP22

Rotation control
Option **D1**, **H1** and **H3**

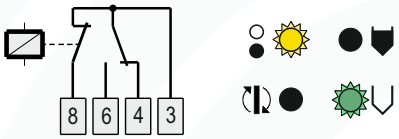

001-AP21

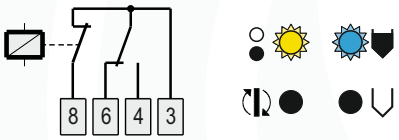

001-AP23

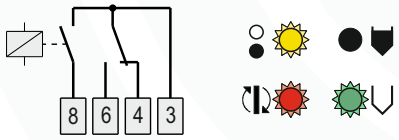

001-AP24

In the case of device malfunction the relay interrupts the circuit to clamp 8.

Signal lamps

DF21...DF33
Option **H2**, **H3**, **H8**

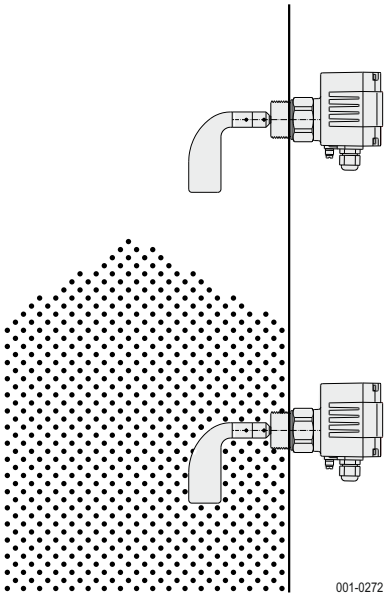

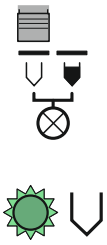

001-AP25

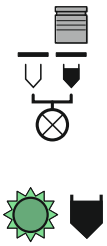

001-AP26

ATTENTION!

Level indicator is always to be brought into circuit so that no undesirable switching function can occur in the case of mains voltage failure.

Signal lamps and function displays

Switching logics, under DF-GI-22

Collar for function LEDs **H1**
(in the case of **DF11** option **H6**)

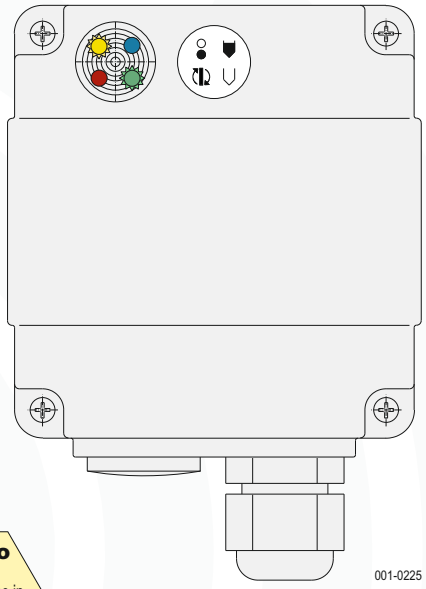

Ex -Info
Certified for use in areas of **zone 22**
B3

Signal lamp, LED green **H2**
(not available for **DF11**)

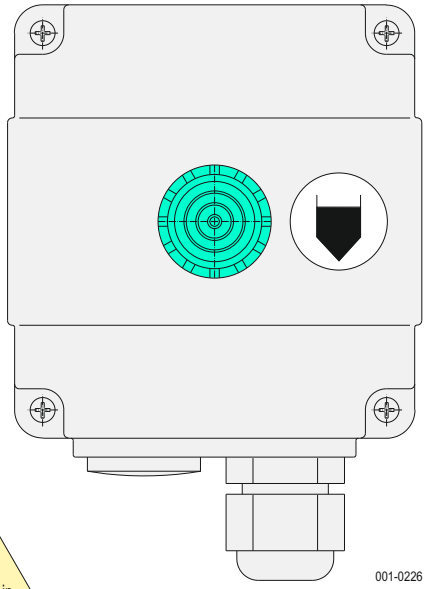

Ex -Info
Certified for use in areas of **zone 22**
B3

Large signal lamp, LED green **H8** as option
(not available for **DF11**)

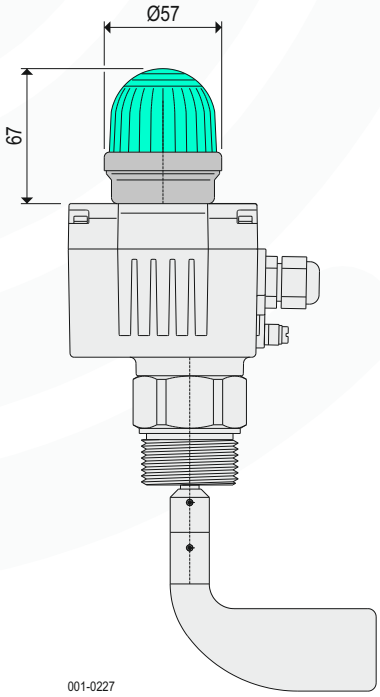

Selection of lamp functions
for signal lamp **H2** and large signal lamp **H8**

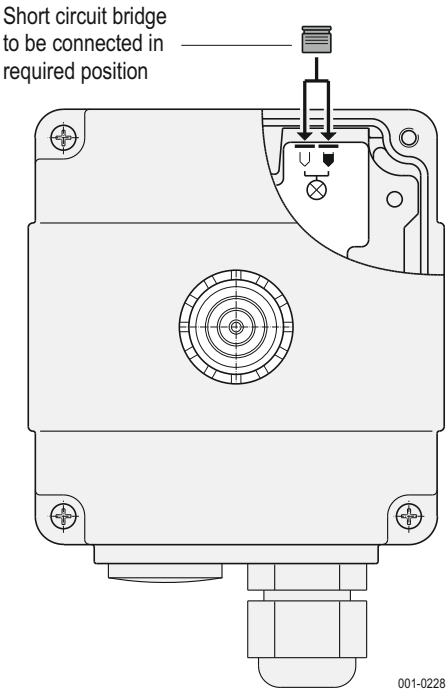

Collar for function LEDs together with signal lamp **H3** as option.

Selection guide

Application	Type									
	DF11	DF21	DF22	DF23	DF24	DF25	DF26	DF27	DF28	DF30
Full indicator	X	X	X	X	X	X	X	X	X	X
Demand indicator	X	X	X	X	X	X	X	X	X	
Empty indicator	X	X	X	X	X	X	X	X	X	
Any mounting position	X	X	X	X	X				mit KD	
Horizontal mounting	X	X	X	X	X	X			mit KD	X
Lateral mounting	X	X	X	X	X	X			mit KD	
Vertical from top	X	X	X	X	X		X	X	X	X
Inclined from top	X	X	X	X	X				mit KD	
Inclined from bottom	X	X	X	X	X				mit KD	
Loading bellow	X	X		X						X
Height adjustable									X	
For moist bulk goods	X	X	X	X	X	X	X	X	X	X
Vertical immersion in liquids from top	X						X	X	X	
Detection of bulk goods in liquids							X	X	X	
For sludges vertical from top							X	X	X	
In moist and aggressive gases		X	X	X	X	X	X	X	X	X
Temperatures up to 260°C		X		X	X	X	X	X	X	
Temperatures up to 500°C		X					X	X	X	
Temperatures up to 1000°C		X					X	X	X	

Setting the sensitiveness

The sensitivity of the level indicator can be set according to the characteristics of the bulk goods by regulating the spring force.

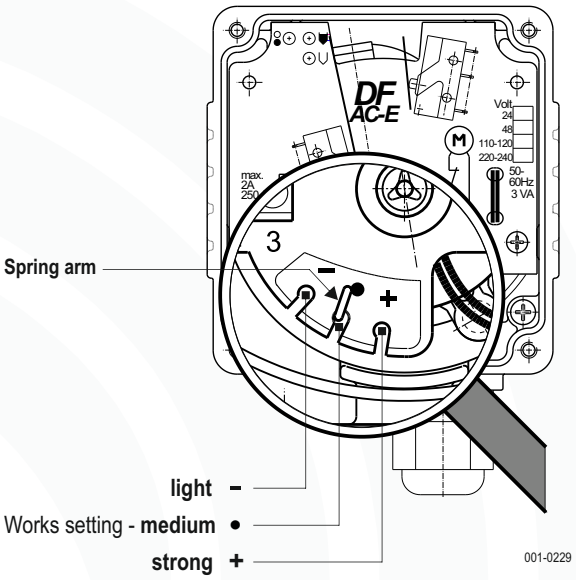

Adjustment possibilities

1. Changing the spring bias (see figure):
   - set **light,** for very light bulk goods: put spring in by (**–**) - (lesser spring tension).
   - set **medium,** suitable for almost all bulk goods: put spring in by (•) - (mean spring tension).
   - set **strong,** for heavy and sticking bulk goods: put spring in by (**+**) - (higher spring tension).
2. Select size of the measuring blade:
   - make it more sensitive (lighter bulk goods): Choose a larger measuring blade
   - make it less sensitive: Choose a smaller measuring blade
3. Changing the spring:
   - On demand install a stronger or weaker spring (3 types available)

All values given are approximate values and depend on the characteristics of the bulk goods such as consistency and flow behaviour, for example.

Selection guide for measuring blades

Lowest bulk density ρ_b for which the measuring blade can be set.

Bulk density ρ_b in t/m³ or kg/l

Filling level up to 100 mm above measuring blade
Filling level until measuring blade is compl. covered

Measuring blade	Blade size	Spring force setting light	Spring force setting medium
S1 Socket blade	100x30	0.25 / 0.4	0.35 / 0.6
S2 Socket blade	130x30	0.2 / 0.35	0.3 / 0.5
M1 Socket blade	90x28	0.15 / 0.3	0.2 / 0.5
M2 Socket blade	90x40	0.1 / 0.2	0.15 / 0.3
T0 Blade T200	68x220	0.15 / 0.3	0.25 / 0.5
T1 Blade T50	98x50	0.15 / 0.3	0.25 / 0.5
T2 Blade T100	98x100	0.1 / 0.2	0.2 / 0.45
T5 Blade T250	250x100	0.015 / 0.02	0.02 / 0.03
T8 Rubber blade	250x100	0.015 / 0.02	0.02 / 0.03
TK Blade TK150	150x27	0.25 / 0.4	0.35 / 0.6
TK3 3 Blade TK150	150x120	0.15 / 0.2	0.2 / 0.3
TD Blade TD140	140x85	0.2 / 0.4	0.3 / 0.5
X1 Blade X50	98x50	0.15 / 0.3	0.25 / 0.5
X2 Blade X100	98x100	0.1 / 0.2	0.2 / 0.45
X3 Blade X200	180x100	0.025 / 0.05	0.075 / 0.15
K1 Hinged blade T230	200x30	0.05 / 0.08	0.07 / 0.12
SG Blade	126x8	0.45 / 0.55	0.65 / 0.75
TG Blade	98x8	0.5 / 0.6	0.7 / 0.8
K3V Hinged blade reinforced	185x28	0,08 / 0,12	0,1 / 0,15

Fluidised bulk goods are lighter when being filled and delivered. This has to be taken appropriately into consideration when selecting the measuring blade and setting the spring force.

Measuring blade

Type of ignition protection for all pictured rotary blades: Ex II 1G/- IIC
Ex II 1D/- IIIC

TO Blade

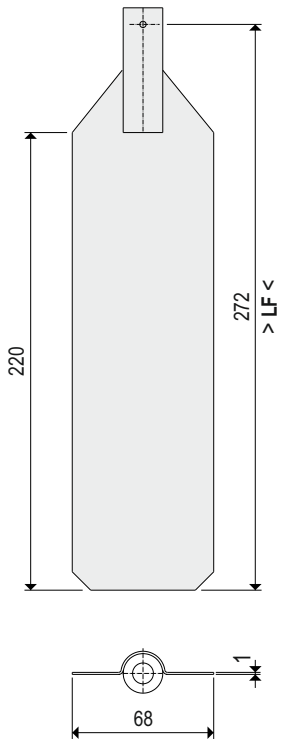

001-0230

X Blade

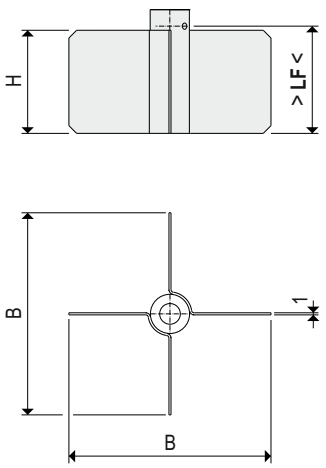

	B	H	LF
X1	98	50	52
X2	98	100	102
X3	180	100	102

001-0233

SG Socket blade, reinforced

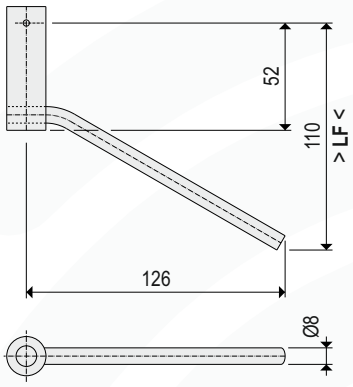

001-0231

TG Blade, reinforced

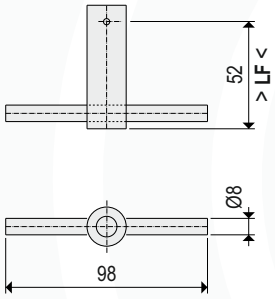

001-0232

K1 Hinged blade

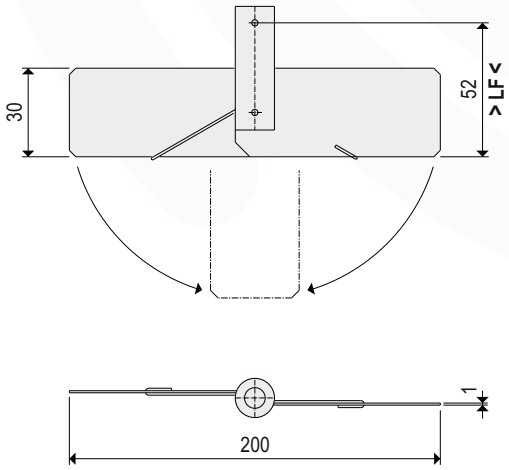

001-0234

Measuring blades

Type of ignition protection for all pictured rotary blades: Ex II 1G/- IIC
Ex II 1D/- IIIC

S1 Socket blade (only for **DF11**)

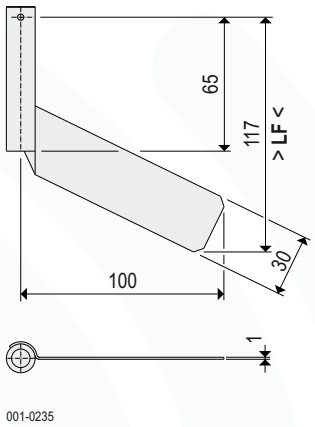

S2 Socket blade

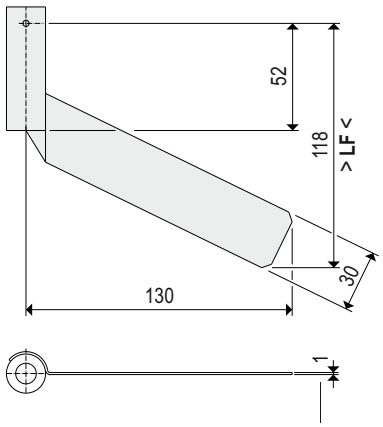

2 mm with **S2V** socket blade, reinforced

M1V Socket blade, reinforced

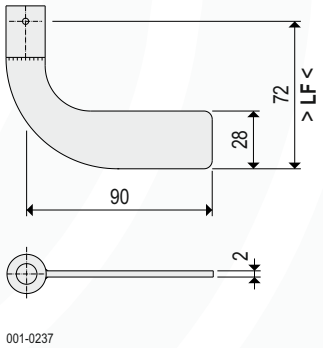

M2V Socket blade, reinforced

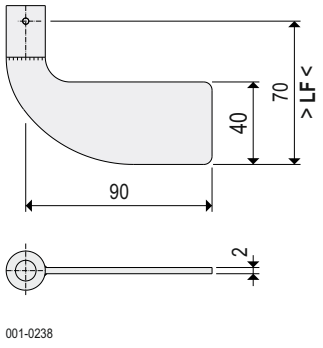

T Blade

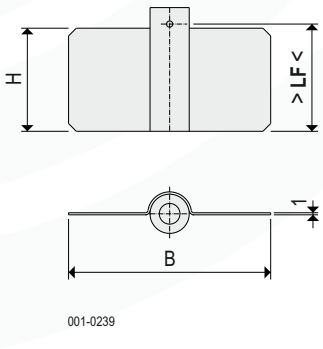

	B	H	LF
T1	98	50	52
T2	98	100	102
T3	200	100	102
T5	250	100	102
T8[1])	250	100	102

[1]) Blades 10 mm thick
in rubber NBR, black

T Blade, reinforced

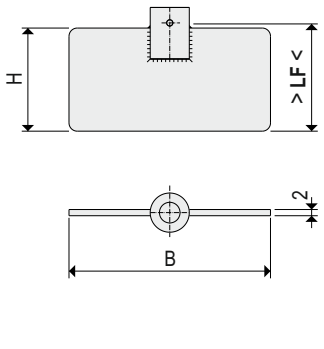

	B	H	LF
T1V	98	50	52
T2V	98	100	102

001-0240

Measuring blade

Type of ignition protection for all pictured rotary blades: Ex II 1G/- IIC
Ex II 1D/- IIIC

M8V Socket blade, reinforced for very small process connections

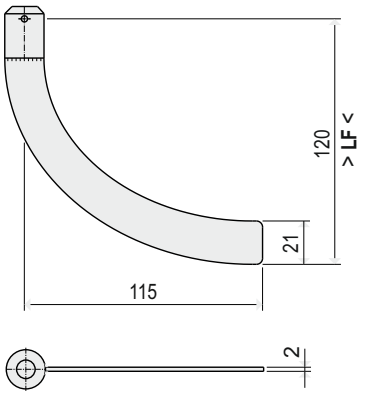

001-0165

Y3V Measuring blade, reinforced for small round vessels

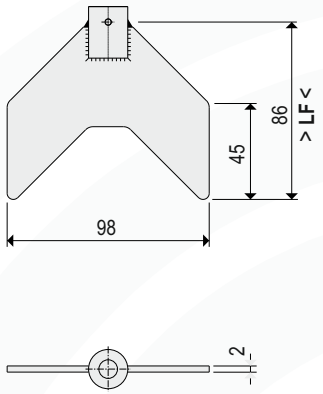

001-0166

Measuring blade

Type of ignition protection for all pictured rotary blades: Ex II 1G/- IIC
Ex II 1D/- IIIC

K3V Hinged blade, reinforced

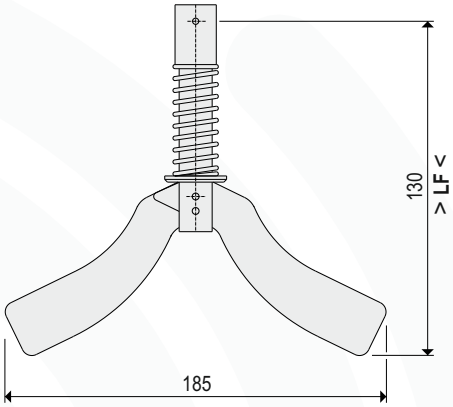

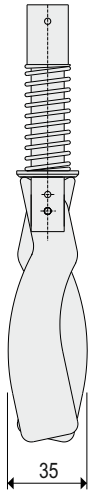

Folded, to conduct trough a socket with thread G1¼.

001-0167

Mounting

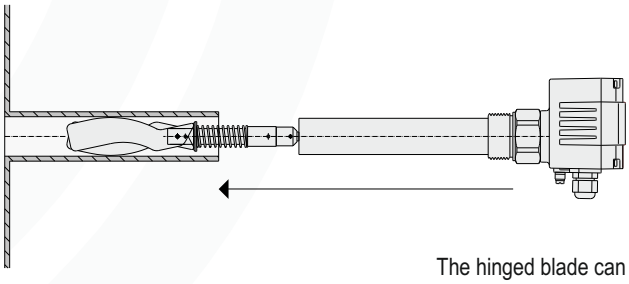

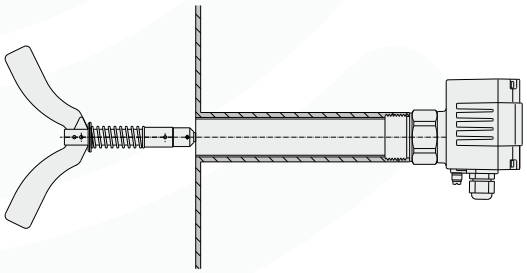

The hinged blade can be also inserted trough a long tube socket.

The blade is unfolding itself by the spring force.

During the dismounting the blade is folding itself.

By the rounded oval shape, the blade glides effortless trough the tube socket, also if there are threads or surface irregulations inside.

001-0168

Mounting positions

Provisions have been made for various mounting positions in any, inclined, vertical and horizontal position, depending on the type of device.

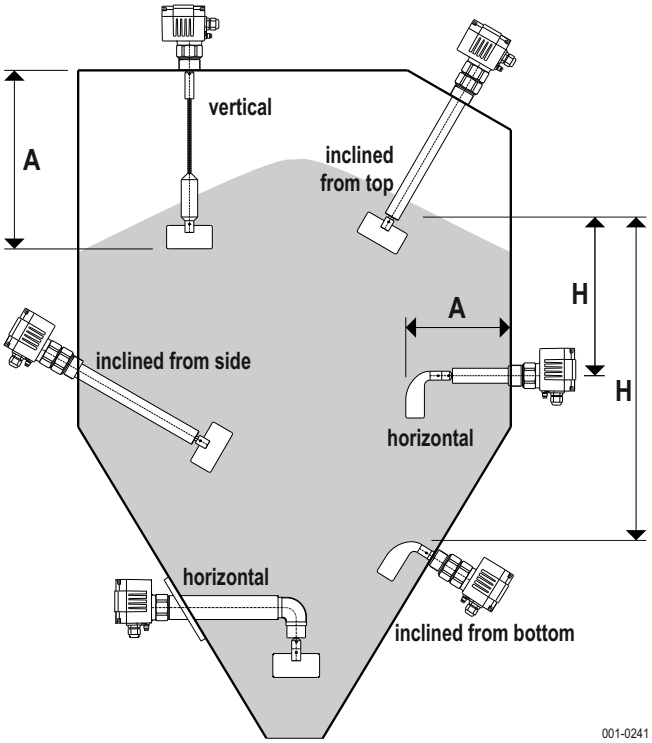

A Jib lenght

H Bulk goods column above the shaft and measuring blade. Depending on height and weight of the bulk goods, pay attention to **"Protection from heavy load"**.

Installation

The level indicators are mounted on the vessel with thread connection or flange respectively.

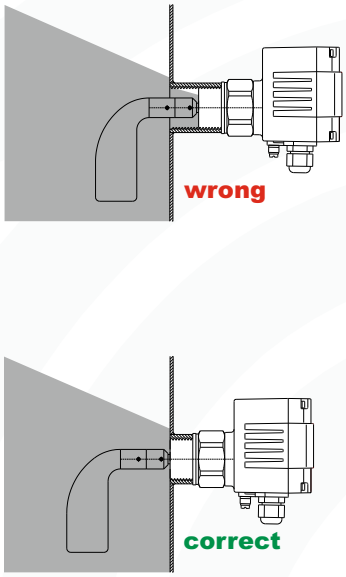

The devices should by installed, that no bulk goods can deposit in the thread or flange fittings.

Inclination

The **DF26** and **DF28** level indicators may be installed only with an inclination of no more than ±5°, and **DF27** with an inclination of no more than ±30°.

For the **DF21** level indicator with a shaft extension up to 200 mm in lenght and lightweight bulk goods, an inclination of up to 90° is permissible (lateral installation with horizontal shaft). However, in that case compliance with section **"Protection from heavy load"** is mandatory.

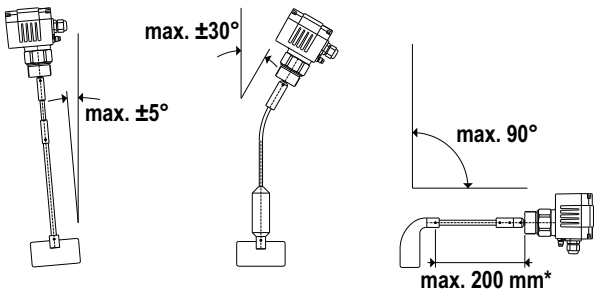

* in special cases longer extensions are possible

Protection from moisture

After tightening the screws, adjust the control head by twisting so that the cable conection points downwards.

Advantage: optimal functioning of the device and no infiltration of moisture

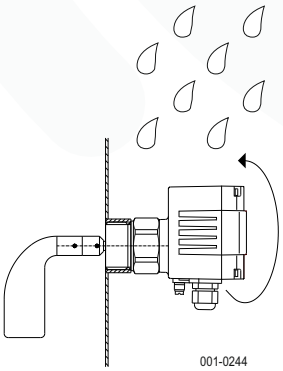

To this end the control head can be rotated by 360° relative to the process connection.

Protection from impacting bulk goods

Level indicators must not be affected by flying bulk goods particles e.g. from injection pies, filling pipes or downpipes. Therefore the bulk goods stream should be directed or redirected accordingly, or the level indicator should be placed so that bulk goods cannot impact directly onto the blade shaft or the measuring blade.

Especially for heavy bulk goods which may damage the shaft or blades, a stable deflector or protective cover should be installed if necessary to protect shaft and blades from impacting bulk goods.

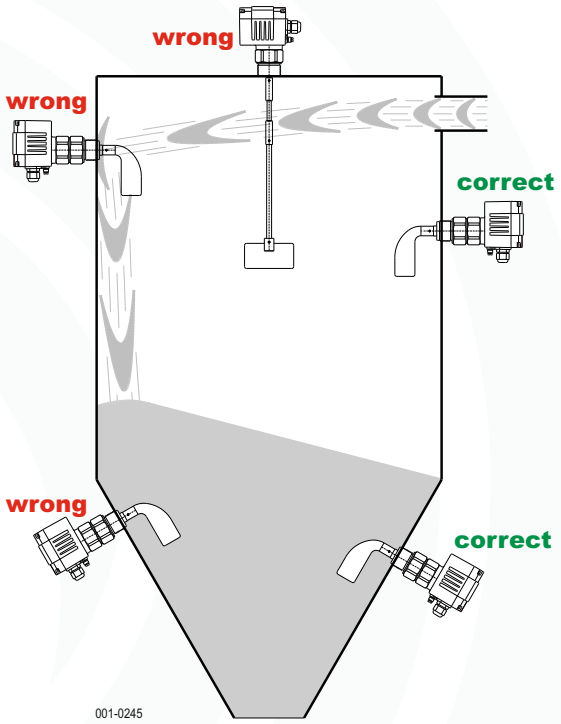

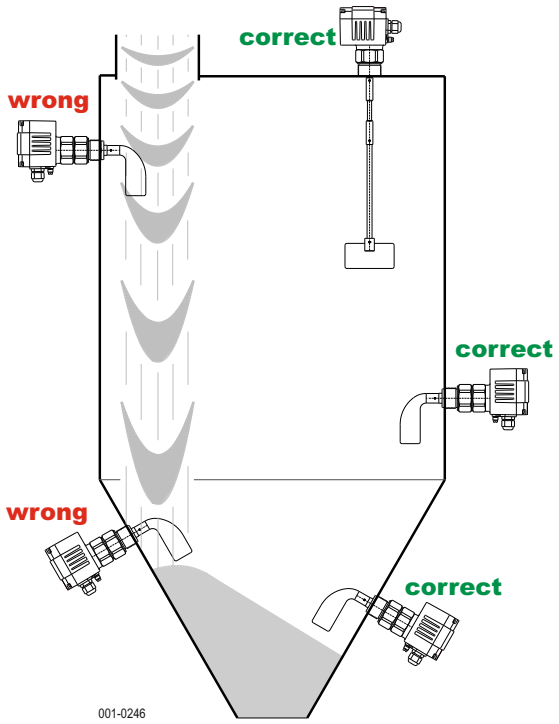

Protection from heavy load

If the bulk goodsl is heavy, may agglutinate to form large lumps or is prone to cross-linking, the **DF23** or **DF24** level indicators with reinforced blade shaft should be used.

Otherwise, install a protection roof in the container above the level indicator to shield the shaft and the blades from the weight of the bulk goods.

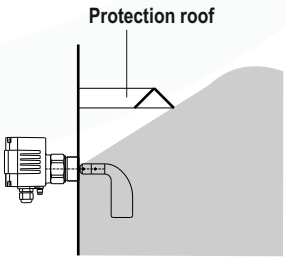

Between the protection roof and the rotating blades there must be sufficient space so the bulk goods may enter but not get stuck.

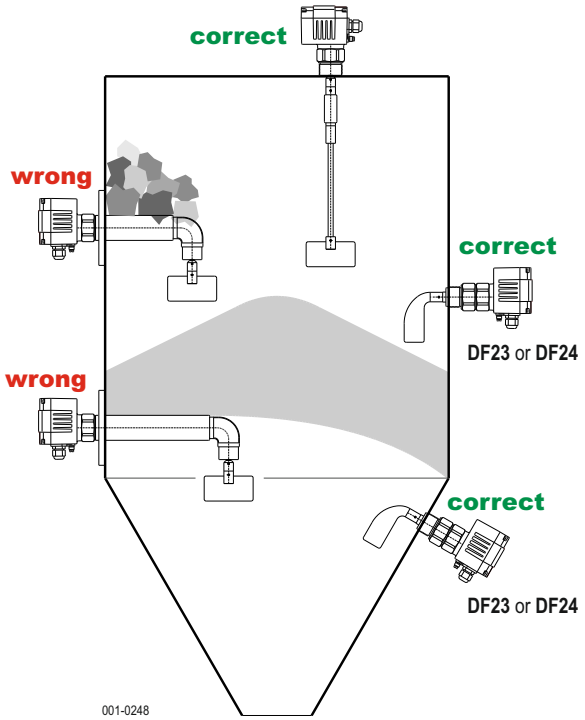

Application instructions

DF11

simple applications
any mounting position

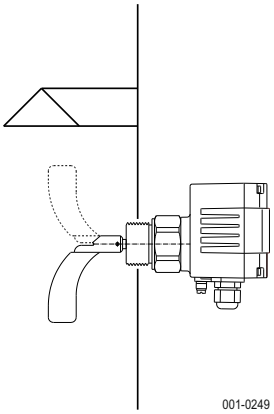

In the case of application as empty indicator it is recommended that the blade will be cut off on the one end and if the blade will be subject to heavy loads and stress additional the installation of a protection roof is recommended.

DF21 and DF22

large range of applications
any mounting position

loadability of the measuring blade

F_1 max. **90 N**

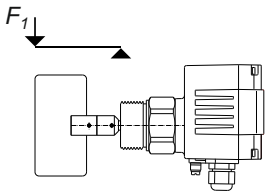

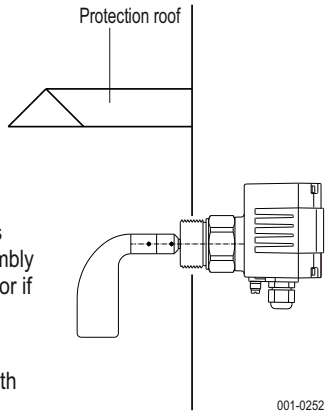

The installation of a protection roof is recommended when the blade assembly is subject to higher loads and stress or if it will be used as empty indicator.

Or the **DF23** / **DF24** is to be used with reinforced blade shaft

DF23 and DF24

with reinforced blade shaft Ø20
any mounting position

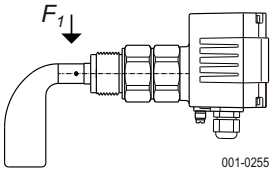

Loadability of the shaft

F_1 max. **780 N**

Loadability of the support tube

F_2 max. **2.100 N**

with reinforcement ribs

F_2 max. **11.000 N**

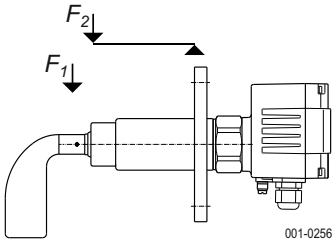

Empty indicator to be equipped with socket blade with preference.

DF25

angled jib
vertical installation

loadability of the measuring blades

F_1 max. **90 N**

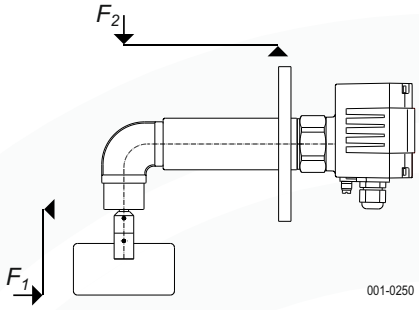

loadability of the support tube F_2 max. **2.100 N**

with reinforcement ribs F_2 max. **11.000 N**

DF31...DF33

rotating measuring blade
any mounting position

Loadability of the measuring blades

F_1 max. **25 N**

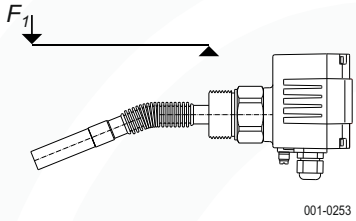

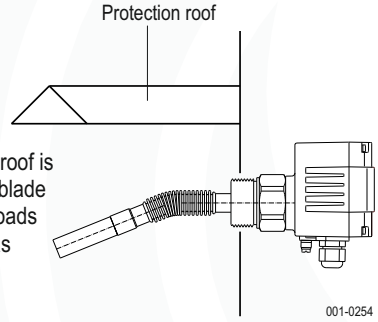

The installation of a protection roof is to be recommended when the blade assembly is subject to higher loads and stress or if it will be used as empty indicator.

DF11

with **pendulum shaft**
vertical installation

with **rope shaft**
vertical installation

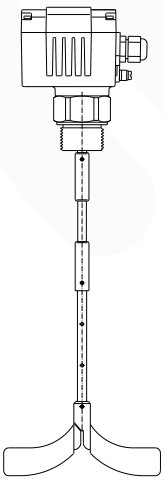

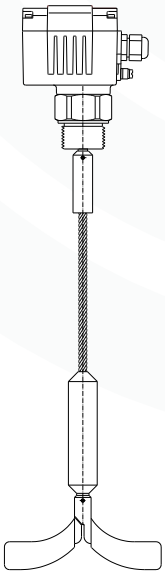

max. permissible traction force **1.5 kN**

max. permissible traction force **4 kN**

Application instructions

DF26

with **pendulum shaft**
vertical installation

max. lenght > **L** < = 1.500 mm

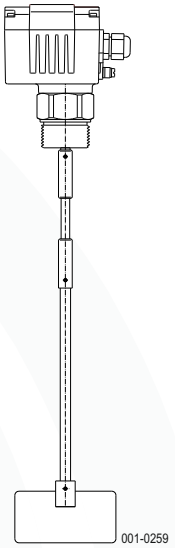

max. permissible traction force **2.0 kN** ↓

DF27

with **rope shaft**
vertical installation

max. lenght > **L** < = 10.000 mm

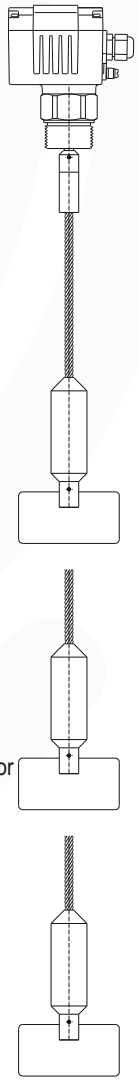

with option **Z3** = reinforced axial bearing max.
permissible traction force **50 kN**

max. permissible traction force < 4.000 mm **4.0 kN** ↓
max. permissible traction force > 4.000 mm **5.5 kN**

DF28

with **protecting tube**
vertical installation

Applicable in any mounting position up to a length of 1.500 mm and with **KD** as option (see below).

L_1 = 500 mm
L_2 = 1000 mm

Bend capacity at
the **protecting tube**

F_1 at L_1 max. **480 N**

F_1 at L_2 max. **240 N**

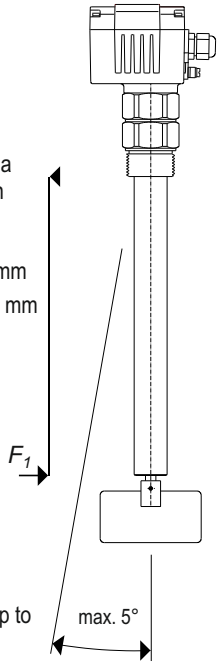

Deviations from vertical mounting angle up to approx. 5° depending on length.

Support for lengths as from 2.000 mm upwards to be recommended.

max. lenght > **L** < = 6.000 mm

full, demand and empty indicator

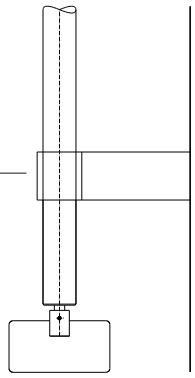

DF28

with **protecting tube**
any mounting position with **KD** option

max. lenght > **L** < = 1.500 mm

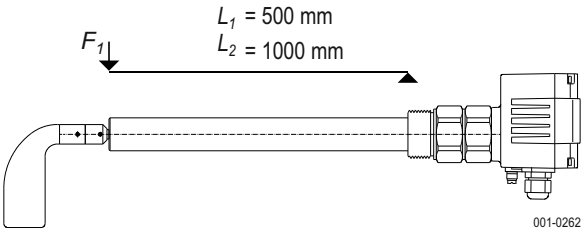

Bend capacity at the **protecting tube** (Support tube)

F_1 at L_1 max. **480 N**

F_1 at L_2 max. **240 N**

Option **KD** = Bearing and seal ring on tube´s end